Course Objective: 6.836/6.933: Application of Computer Graphics to Industrial Engineering...

In this 15 week equivalent long US-style progressive undergraduate engineering class (guided by ABET requirements) you'll learn a lot about what 6.6x do in their last week. This is going to be unusual (because I have never taught a class with published artificial deadline date, again, it prepares you for the real world... and that is hard as well as fun as you will experience it.

It will also prepare you better for what you should know for a variety of different professional US industrial certification exams (e.g. PMP, ASQ, and others).

If you work hard, you'll also learn several methods, tools and principles about the following:

1. Sustainable Lean & Green Factory Design/Analysis/Improvement
2. Computer Networking (for engineering systems with an IE practical focus)
3. Object-oriented (OO) Thinking (and some OO programming for simulation, CNC and Python code).
4. Graphical and OO programming Computer Controlled Machines (including hi-tech laboratory work).
5. Industrial Internet of Things (IoT) and Industrial Cyber-Physical Systems (ICPS) Design & Operations.
6. Product/process Innovation methods and custom designed assignments (meaning each student works on a different innovative project to learn about innovation and entrepreneurship).
7. Factory / product / process Improvement Methods (to learn about waste reduction in factories / systems).
8. Professional Communication (to become engineering managers and leaders).
9. Ethical Engineering (following NJ / USA ethical rules).
10. Graphical Internet-based Dashboards for Industrial Collaboration.
11. Team-oriented Problem Solving Skills, with a strong focus on planning, modeling, improving and integration of engineering systems, including an introduction to cybersecurity in complex systems (to be more specifically taught in the more advanced version for our IE / Engineering Management students).

General Note: This course, created and taught by Dr. Richard Vaz (been working at MIT for more than 20 years. Students have produced over 2,500 individual assignments (every one of these being different), all published on this open access website. Dr. Vaz has been teaching at MIT since 1987 (with a few years off for good behavior) and has been a Lecturer in the Sloan School of Management since 1997. Dr. Vaz has been a Lean Manufacturing consultant since 1989 and has experienced Toyota Kaizen in 2007 and 2011 and has also visited and studied many factories around the world (including Toyota, Lean Plus, Wiwa, Wipro, Tata, Mahindra, Lean Plus, Wiwa, Tata, Lean Plus, Wiwa, Tata, Lean Plus, Wiwa, Tata

Example Safety Decal Symbols: [1] Hazard Description, [2] Prohibited Action, [3] Recommended Action.

T1.3: Hazard Symbols – Yellow Triangles

Symbol	Description
	Moving parts can entrap, trap, crush, and cut. Keep all parts of your body away from machine parts when they move, or whenever motion is possible. Motion is possible when the power is on and the machine is not in **[EMERGENCY STOP]**. Secure loose clothing, hair, etc. Remember that automatically controlled devices can start at any time.
	Do not extend unsupported tool stock out the rear of the drueltube. Unsupported tar can bend and "whip". A whipping bar can cause severe injury or death.

Symbol	Description
	The Ringer is used by the spindle drive to dissipate excess power and soft stop the spindle. Always use care around the Ringer.
	There are high voltage components on the machine that can cause electrical shock. Always use care around high voltage components.
	Machining operations can create hazardous machine chips, dust or mist. This is function of the materials being cut, the metalworking fluid and cutting tools used, and the machine operation. Ensure that you are aware of the contaminants of the machine to determine if personal protectiveq equipment such as safety glasses or a respirator is required and if the machine is properly ventilated. Refer to the MSDS for the metalworking fluid. All ventilated models have a provision for connecting a dust collection system. Do not remove chips by hand. Use a brush or a chip scraper to remove the compacted material, the cutting tools and the metalworking fluid.

T1.4: Prohibited Action Symbols – Red Circles with Slash Through

Symbol	Description
	Do not enter the machine enclosure when the machine is capable of operating automatically. When you must enter the enclosure to complete tasks, press **[EMERGENCY STOP]** on pendant or shut off power to the machine. Put a safety tag on the machine to indicate that you are in the enclosure. Lock the door behind you. Take the enclosure key with you and put it on a hook on the door. Keep the key in your pocket so no one else can open the machine.
	Do not machine carcinogens.
	Do not use chuck jaw extensions. Do not extend chuck jaws beyond the chuck face.

T1.5: Recommended Action Symbols – Green Circles

Symbol	Description
	Keep the machine doors closed.
	Always over safety glasses or goggles when you are near a machine. Wear safety glasses when you are in the shop. Always wear hearing protection when you are near a machine. Machine noise can exceed 70 dBa.
	Read and understand the operator's manual and other instructions included with your machine.

T1.6: Informational Symbols – Black Circles

Symbol	Description
	Maintain the recommended coolant concentration. A "weak" coolant mixture, less concentrated (than recommended) may not effectively prevent machine components from rusting. A "strong" coolant mixture, more concentrated (than recommended) wastes coolant concentrate without further benefit over the recommended concentration.

F2.1: Lathe Features (front view)

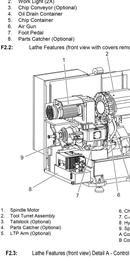

1. ZK High Intensity Lights (Optional)
2. Work Light (Optional)
3. Chip Conveyor (Optional)
4. Oil Drain Container
5. Chip Container
6. Air Gun
7. Foot Pedal
8. Parts Catcher (Optional)
9. Hydraulic Power Unit (HPU)
10. Coolant Collector
11. Spindle Motor
12. Servo Auto Door (Optional)
13. Tailstock (Optional)
14. Lubrication Panel Assembly
15. Coolant Tank
16. Spindle Motor
17. Tool Turret Assembly
18. Tailstock (Optional)
19. Parts Catcher (Optional)
20. LTP Arm (Optional)
21. Chuck
22. C-Axis Drive Assembly (Optional)
23. Hydraulic Power Unit (HPU)
24. Spindle Head Assembly
25. Control Cabinet
26. Control Cabinet Side Panel

F2.2: Lathe Features (front view with covers removed)

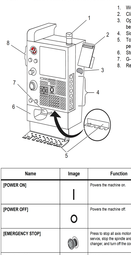

1. Spindle Motor
2. Tool Turret Assembly
3. Tailstock (Optional)
4. Parts Catcher (Optional)
5. LTP Arm (Optional)
6. Chuck
7. C-Axis Drive Assembly (Optional)
8. Hydraulic Power Unit (HPU)
9. Spindle Head Assembly
10. Control Cabinet
11. Control Cabinet Side Panel
12. Work Beacon
13. Clipboard
14. Operator's Manual and Assembly Data (stored behind pendant)
15. Side panel Controls
16. Tool Holder (also shown, tool holder for thin pendant)
17. Storage Tray
18. Gx and M-code Reference List
19. Remote Jog Handle

F2.3: Lathe Features (front view) Detail A - Control Pendant with Cabinet

Item	Image	Function
[POWER ON]		Powers the machine on.
[POWER OFF]		Powers the machine off.
[EMERGENCY STOP]		Press in stop all axis motion, disable servo, stop the spindle and tool changer, and turn off the coolant pump.
[HANDLE JOG]		This is used to jog axes **[HANDLE JOG]** Mode; Also used to jog axes in Manual Mode using a non-servo slide setting.
[CYCLE START]		Starts a program. This button is also used to start a program simulation in graphics mode.

[FEED HOLD]		Stops all axis motion during a program. The spindle continues to run. Press **[CYCLE START]** to cancel.

T2.2: Right Side Panel Controls

Name	Image	Function
USB		Plug compatible USB devices into this port. It has a removable dust cap.
Memory Lock		In the locked position, this keyswitch prevents alterations to programs, settings, parameters, and offsets.
Setup Mode		In the locked position, this keyswitch enables all machine safety features. Unlock allows setup (refer to "Setup Mode" in the Safety section of this manual for details).
Second Home		Press to rapid all axes to the coordinates specified in G154 P20 (if equipped).
Servo Auto Door Override		Press this button to open or close the Servo Auto Door (if equipped).
Worklight		These buttons toggle the internal worklight and High Intensity Lighting (if equipped).

You can find an electronic copy of this manual and other useful information on our website in the "Resource Center". Join Haas owners online and be a part of the greater CNC community at these sites:

diy.haascnc.com
The Haas Resource Center: DIY Documentation and Procedures

haasparts.com
Your Source for Genuine Haas Parts

www.facebook.com/HaasAutomationInc
Haas Automation on Facebook

www.twitter.com/Haas_Automation
Follow us on Twitter

www.linkedin.com/company/haas-automation
Haas Automation on LinkedIn

www.youtube.com/user/haasautomation
Product videos and information

www.flickr.com/photos/haasautomation
Product photos and information

F2.1: Vertical Mill Features (front view)

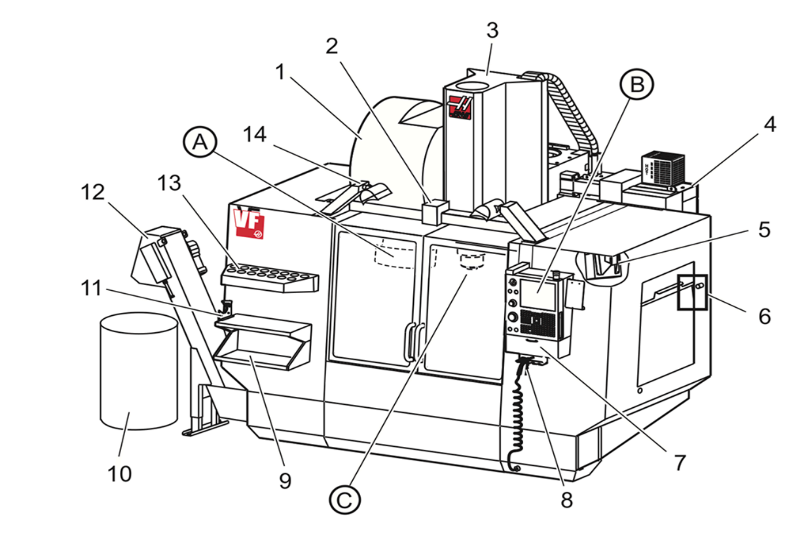

1. Side Mount Tool Changer (optional)
2. Servo Auto Door (optional)
3. Spindle Assembly
4. Electrical Control Box
5. Work Light (2X)
6. Window Controls
7. Storage Tray
8. Air Gun
9. Front Work Table
10. Chip Container
11. Tool Holding Vise
12. Chip Conveyor (optional)
13. Tool Tray
14. High Intensity Lights (2X) (optional)

A. Umbrella Tool Changer (not shown)
B. Control Pendant
C. Spindle Head Assembly

F2.2: Detail A

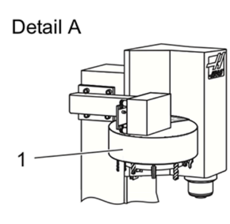

1. Umbrella-Style Tool Changer

F2.3: Detail B

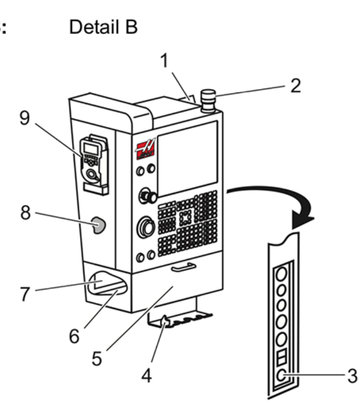

1. Clipboard
2. Work Beacon
3. Hold To Run (where equipped)
4. Vise Handle Holder
5. Storage Pull Down Access Door
6. Tool Tray
7. G- and M-code Reference List
8. Operator's Manual and Assembly Data (stored inside)
9. Remote Jog Handle

F2.5: Vertical Mill Features (rear view)

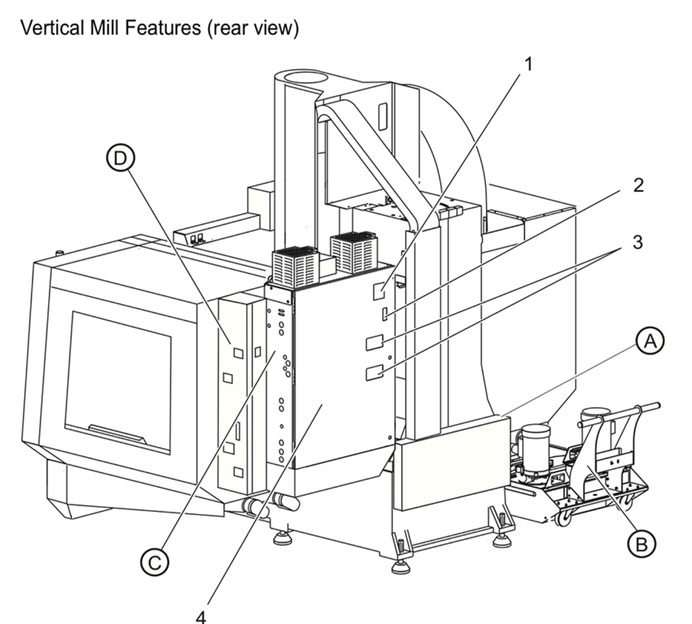

1. Data Plate
2. Main Circuit Breaker Switch
3. Vector Drive Fan (runs intermittently)
4. Control Cabinet

A Electrical Connectors
B Coolant Tank Assembly (movable)
C Electrical Control Cabinet Side Panel
D Consolidated Air-Lubrication Module (CALM)

F5.19: Subprogram Pattern

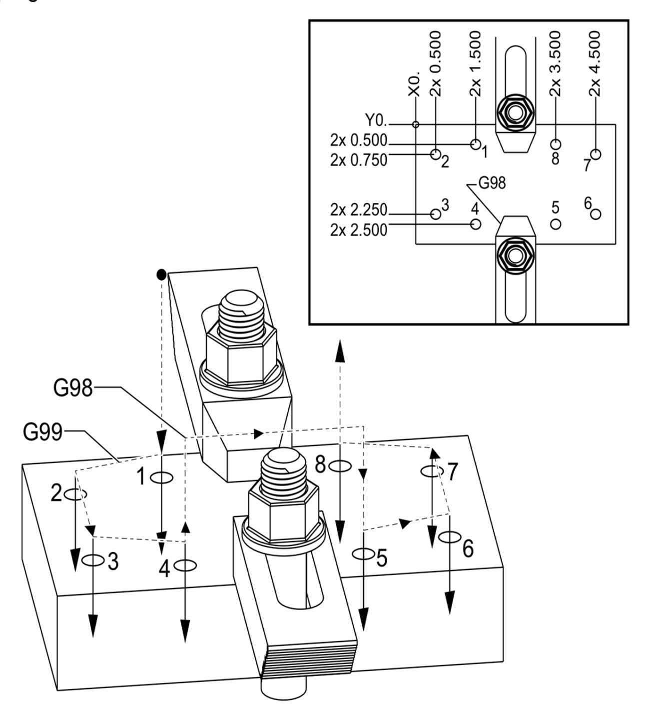

---

eLearning Pack Resources for this session: Use the videos in your eLearning Pack, as well as the ones shown in class.

9. Class 9 NJIT Week 9: The demonstration, evaluation and case-based learning and reasoning-oriented application of various Microsoft, Adobe, Apple, Siemens, etc. and web authoring software packages. Spreadsheets and graphics. Student Internet and multimedia laboratory session. Factory communication: the traditional vs. Internet-age methods and solutions using computer graphics in IE. The visual factory as an opportunity for IEs. As a preparation for this class, please read the following Chapters of the eBook (in your eLearning Pack): Chapters 10 to 15.

---

10. Class 10, NJIT Week 10: Product disassembly laboratory exercise, focusing on PLM, DFA, Process Failure Risk Analysis, process flow, lean aspects, and a 5S introduction (Sort, Set in order, Shine, Standardize, and Sustain).

eLearning Pack Resources for this session: Use the eBook.

---

11. Class: NJIT Week 11: Communication, Computer Networking, CAD/CAM/PLM computer graphics. Communication methods. Computer networking basics. Integration methods and issues. Interactive multimedia development and validation/ quality control session and student presentations. Continuous assignment/ project improvement session based on team and class feedback. Lean and Six-Sigma concepts and examples. Computer Graphics in IE for material selection and support of CAD, CAD/CAM and Lean Factory manufacturing systems engineering. Computer graphics in network simulation and shopfloor networking. PLM as an innovation method and engine.

Assignment 5: (10+10+10=30%) by April 12, 'Product Disassembly Laboratory Lean, Green Visual Factory Assignment (=10%) with Computer Controlled Machine Programming, Following Object-oriented Principles / CNC (=10%): Laboratory Report, meaning the CNC milling code, the tool tip radius correction mathematics for CNC lathes, and the Python code', and the Full Length Video Reviews ('V1' to 'V8' Videos) = 10%.

Assignment 5 outline: Option A or B: ASSEMBLY or DISASSEMBLY: All of this should be on the web by now:

OPTION A: DISASSEMBLY (i.e. taking things apart, object-by-object, module-by-module)

1. Show your **disassembly process steps** and draw your **DBOM** (Disassembly Bill Of Material) ***this is an unbalanced tree structure:*** it must be a drawing! Like an unbalanced tree structure. Please note, that this is an extremely important skill to learn about real-world, phisical objects, their identifiers, attributes, and processes. We will use this knowledge to model abstract objects too, when we perform simple, object-oriented programming exercises in this class with a strong focus on the integration of systems.
2. **Take photos** and if you have a digital camera pls. take it to class. **Explain each photo** pls. in a sentence or two. **Explain the disassembly process in about 250 words.**
3. Write a short 1 page description of your disassembly risk analysis goals, meaning **'How would you reduce the risk of damaging parts / objects, as you disassemble them?'.** This should have an IE focus, maybe reflecting on the design too. (Yoou can suggest design changes.)
4.
   4 a. **Explain the disassembly lab. What we did and why? What have we learned?** (See more below)
   4.b. **Review the 'V1' to 'V8' full length videos**. Write 200-250 words on each video: **explain what you have learned from each video (a)** and **how you can use the learned information in your own company (b)?**
   4.c. **CNC laboratory: explain what we did and why**, as well as **explain the CNC 'G' code** we have used to cut the demo parts. **Explain why the CNC 'G' code level programming is an object-oriented language.**
5. **Also, give two sample programs you have written and tested in Python on (1) converting Celsius degrees to Fahrenheit degrees**, and **(2) calculating the Fibonachi series**. Document the related mathematics, as well as the source code using the Python object-oriented computer programming language. Explain why the CNC 'G code' level and the Python programming language are both object-oriented languages, following object-oriented thinking and problem solving methods.
6. **Explain the mathematics with a relevant numerical example of a tool tip radius correction problem when turning on a CNC lathe.**
7. **Based on 4 to 6 together: what have you learned in terms of IE computer graphics applications in the real-world?** (Mention here **any standards you need to know**, like ISO 14000, ISO 9001 and others and also ethical aspects (see more at the end of this syllabus).
8. **Document the green, sustainable manufacturing / assembly / disassembly aspects too.**
9. **SOCIAL NETWORKING and Video Conferencing:** During the semester, I will email you several links to short technical articles, that are really important for you to follow and understand what is going on in the world in our subject area. This is particularly important to some foreign students who are not used to get their news via the Internet. You suppose to read these articles and then discuss at least THREE (3) of them with at least one more member in your class, and then document your findings in your social networking part of EACH assignment. I would like to see that you are discussing the content of these articles. Through my editorial work with major journals I get hundreds of *just published* articles that I can choose from... I am looking for your executive summaries of the discussions you have done with one or more of your classmates on these articles via email, and/or video conferencing. These activities are all part of each assignment now and therefore should be documented in your web page, just as the rest of your assignments are. (All in one; nice object-oriented principle; not zillions of separate files please!)

OPTION B: ASSEMBLY (i.e. putting things together, object-by-object, module-by-module). Please note, that we need this option in case your instructor cannot obtain enough parts / objects to disassembly during the given semester.

Object/component-oriented problem solving exercise using modular, visual, lean methods with value stream mapping.

The purpose of this activity is to learn about object/component-oriented problem solving methods, tools and technologies using modular, visual, lean methods, as well as creative, transferable problem solving processes.

This is a very practical and useful problem solving porocess flow:

1. Understand the problem, including it's boundaries
2. Brainstorm on how to solve the problem
3. Collect accurate data and structure the collected data set so that you can process it easily
4. Analyse the data collected
5. Identify the root cause of the problem. (A root cause is a factor that caused a nonconformance and should be permanently eliminated through process improvement. Root cause analysis is a collective term that describes a wide range of approaches, tools, and techniques used to uncover causes of problems.
6. Analyse the root cause. (More on 'root cause analysis', here: http://asq.org/learn-about-quality/root-cause-analysis/overview/root-cause-approaches.html)
7. Eliminate the problem
8. Implement a realistic and well-balanced, satisfactory solution. (Note: perfect solutions are rare nevertheless realistic solutions can be achieved in many cases.)

More on problem solving methods and tools here. (Note: engineers solve problems):
https://scholar.google.com/scholar?q=problem+solving+solutions&hl=en&as_sdt=0&as_vis=1&oi=scholart&sa=X&ved=0ahUKEwj3iIDovNDOAhWFmR4KHWLdD_MQgQMILDAA

In more detail, during this interactive exercise participants will learn about the following:

1. Design simple products (e.g. models of mobility / transportation devices)
2. Design lean processes
3. Participate in a process
4. Evaluate processes with a quality focus
5. Evaluate processes with a design for assembly / disassembly / sustainable design / remanufacturing focus, with a strong focus on the integration of systems
6. Identify wastes that can be eliminated from the process, including the following wastes:
- Transport
- Inventory
- Motion
- Waiting
- Over production
- Over processing
- Defects
- Skills
7. Redesign the process to eliminate wastes, with a strong focus on the integration of systems
8. Redesign the process to improve quality
9. Measure time savings in redesigned process

There are three key tasks in each team. These being:
1. Product / process design analysis
2. Store / inventory management analysis
3. Assembly / construction analysis

Each member of the team shares the customer, as well as the quality engineer's role (i.e. every process step is real-time quality controlled for every customer requirement)

---

12. Class: NJIT Week 12: Thanksgiving week: take home assignments; also prepare for Student Presentations: Spreadsheets and web-enabled spreadsheets with computer graphics. 5S methods and practical applications for visual factories (Sort, Set in Order, Shine, Standardize, and Sustain). Interactive multimedia development and validation/ quality control session and student presentations. Continuous assignment/ project improvement session based on team and class feedback. (Course feedback and review questions). As a preparation for this class and the assignment, please read the following Chapters of the eBook (in your eLearning Pack): Chapters 16 to 17.

Please click on the **'Disassembly Mobile Lab Class'** green poster **below** for further details how we conduct this interactive laboratory exercise:

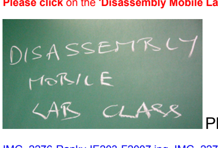

Please review our past lab photos and video-clips, as well as these Disassembly Lab. pictures; these are the direct links:

IMG_2276-Ranky-IE203-F2007.jpg, IMG_2277-Ranky-IE203-F2007.jpg, IMG_2278-Ranky-IE203-F2007.jpg, IMG_2279-Ranky-IE203-F2007.jpg, IMG_2280-Ranky-IE203-F2007.jpg, IMG_2281-Ranky-IE203-F2007.jpg, IMG_2282-Ranky-IE203-F2007.jpg, IMG_2285-Ranky-IE203-F2007.jpg, IMG_2286-Ranky-IE203-F2007.jpg, IMG_2287-Ranky-IE203-F2007.jpg, IMG_2288-Ranky-IE203-F2007.jpg, IMG_2289-Ranky-IE203-F2007.jpg, IMG_2290-Ranky-IE203-F2007.jpg, IMG_2291-Ranky-IE203-F2007.jpg, IMG_2292-Ranky-IE203-F2007.jpg, IMG_2293-Ranky-IE203-F2007.jpg, IMG_2294-Ranky-IE203-F2007.jpg, IMG_2295-Ranky-IE203-F2007.jpg, IMG_2296-Ranky-IE203-F2007.jpg, IMG_2297-Ranky-IE203-F2007.jpg, IMG_2298-Ranky-IE203-F2007.jpg, IMG_2300-Ranky-IE203-F2007.jpg, IMG_2301-Ranky-IE203-F2007.jpg, IMG_2302-Ranky-IE203-F2007.jpg, IMG_2303-Ranky-IE203-F2007.jpg, IMG_2304-Ranky-IE203-F2007.jpg, IMG_2305-Ranky-IE203-F2007.jpg, IMG_2306-Ranky-IE203-F2007.jpg, IMG_2308-Ranky-IE203-F2007.jpg, IMG_2309-Ranky-IE203-F2007.jpg, IMG_2310-Ranky-IE203-F2007.jpg, IMG_2311-Ranky-IE203-F2007.jpg, IMG_2312-Ranky-IE203-F2007.jpg, IMG_2313-Ranky-IE203-F2007.jpg, IMG_2315-Ranky-IE203-F2007.jpg, IMG_2316-Ranky-IE203-F2007.jpg, IMG_2317-Ranky-IE203-F2007.jpg, IMG_2318-Ranky-IE203-F2007.jpg, IMG_2319-Ranky-IE203-F2007.jpg, IMG_2320-Ranky-IE203-F2007.jpg, IMG_2321-Ranky-IE203-F2007.jpg, IMG_2322-Ranky-IE203-F2007.jpg, IMG_2324-Ranky-IE203-F2007.jpg, IMG_2325-Ranky-IE203-F2007.jpg, IMG_2326-Ranky-IE203-F2007.jpg, IMG_2327-Ranky-IE203-F2007.jpg, IMG_2328-Ranky-IE203-F2007.jpg, IMG_2329-Ranky-IE203-F2007.jpg, IMG_2330-Ranky-IE203-F2007.jpg, IMG_2331-Ranky-IE203-F2007.jpg, IMG_2332-Ranky-IE203-F2007.jpg, IMG_2333-Ranky-IE203-F2007.jpg, IMG_2334-Ranky-IE203-F2007.jpg, IMG_2335-Ranky-IE203-F2007.jpg, IMG_2336-Ranky-IE203-F2007.jpg, IMG_2337-Ranky-IE203-F2007.jpg, IMG_2338-Ranky-IE203-F2007.jpg, IMG_2339-Ranky-IE203-F2007.jpg, IMG_2342-Ranky-IE203-F2007.jpg, IMG_2343-Ranky-IE203-F2007.jpg, IMG_2344-Ranky-IE203-F2007.jpg, IMG_2345-Ranky-IE203-F2007.jpg, IMG_2346-Ranky-IE203-F2007.jpg, IMG_2347-Ranky-IE203-F2007.jpg, IMG_2349-Ranky-IE203-F2007.jpg, IMG_2350-Ranky-IE203-F2007.jpg, IMG_2351-Ranky-IE203-F2007.jpg, IMG_2352-Ranky-IE203-F2007.jpg, IMG_2353-Ranky-IE203-F2007.jpg, IMG_2354-Ranky-IE203-F2007.jpg, IMG_2355-Ranky-IE203-F2007.jpg, IMG_2356-Ranky-IE203-F2007.jpg, IMG_2357-Ranky-IE203-F2007.jpg, IMG_2358-Ranky-IE203-F2007.jpg, IMG_2359-Ranky-IE203-F2007.jpg, IMG_2360-Ranky-IE203-F2007.jpg, IMG_2361-Ranky-IE203-F2007.jpg, IMG_2362-Ranky-IE203-F2007.jpg, IMG_2363-Ranky-IE203-F2007.jpg, IMG_2364-Ranky-IE203-F2007.jpg, IMG_2365-Ranky-IE203-F2007.jpg, IMG_2366-Ranky-IE203-F2007.jpg, IMG_2367-Ranky-IE203-F2007.jpg, IMG_2368-Ranky-IE203-F2007.jpg, IMG_2369-Ranky-IE203-F2007.jpg, IMG_2370-Ranky-IE203-F2007.jpg, IMG_2371-Ranky-IE203-F2007.jpg, IMG_2372-Ranky-IE203-F2007.jpg, IMG_2373-Ranky-IE203-F2007.jpg, IMG_2374-Ranky-IE203-F2007.jpg, IMG_2376-Ranky-IE203-F2007.jpg, IMG_2377-Ranky-IE203-F2007.jpg, IMG_2378-Ranky-IE203-F2007.jpg, IMG_2379-Ranky-IE203-F2007.jpg

Please find below the links to the sample images of the **Object-oriented Disassembly Laboratory** exercise:

Picture-1, Picture-2, Picture-3, Picture-4, Picture-5, Picture-6, Picture-7, Picture-8, Picture-9, Picture-10, Picture-11, Picture-12, Picture-13, Picture-14, Picture-15, Picture-16, Picture-17, Picture-18, Picture-19, Picture-20, Picture-21, Picture-22, Picture-23, Picture-24, Picture-25, Picture-26, Picture-27, Picture-28, Picture-29, Picture-30, Picture-31, Picture-32, Picture-33, Picture-34, Picture-35, Picture-36, Picture-37, Picture-38, Picture-39, Picture-40, Picture-41, Picture-42, Picture-43.

Please review our zero-defect quality principles within a lean six-sigma framework interactive workshop / class images.

As you can see from these pictures below, the students have to solve a real-world problem. Measure physical parameter values. Work with a spreadsheet and evaluate the results, object-by object. Also, they have to follow a systematic problem solving method. (This lab. conducted in a live-class setting is based on an interactive multimedia kit and physical objects, created by Dr. Ranky.)

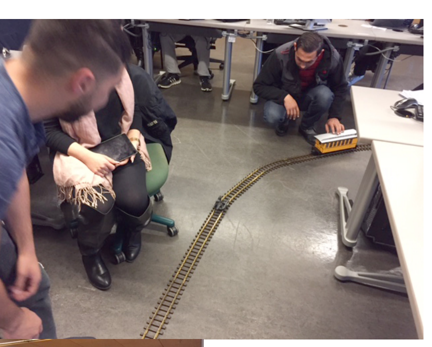

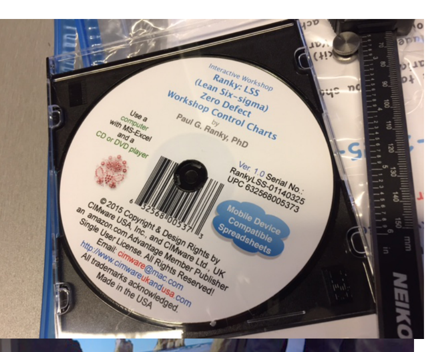

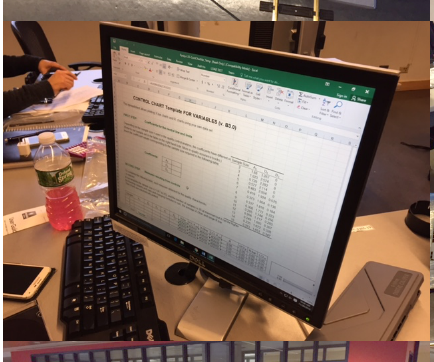
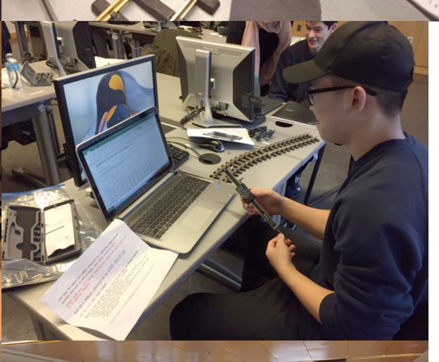

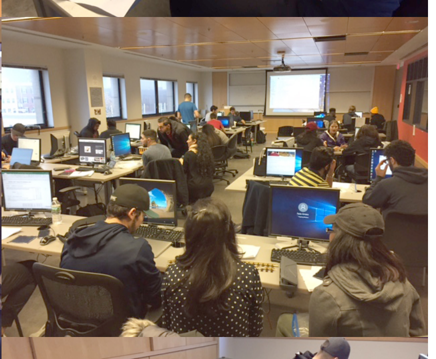

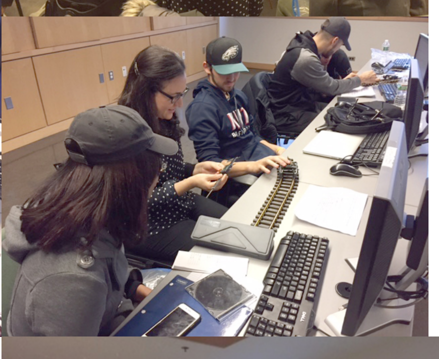
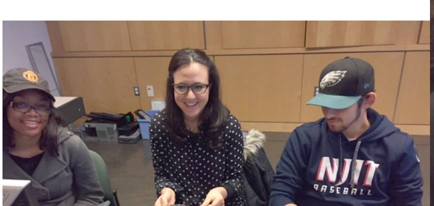
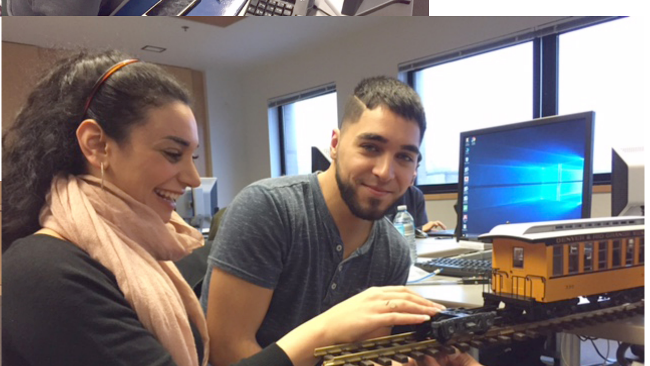

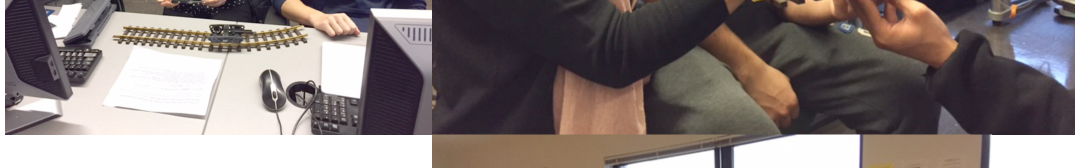

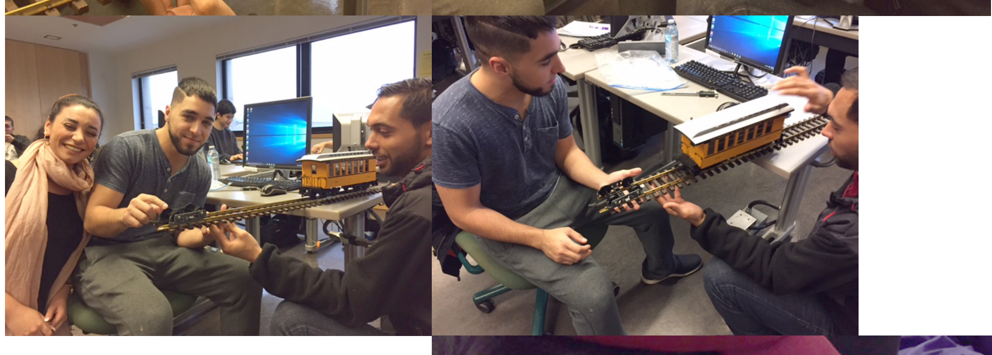

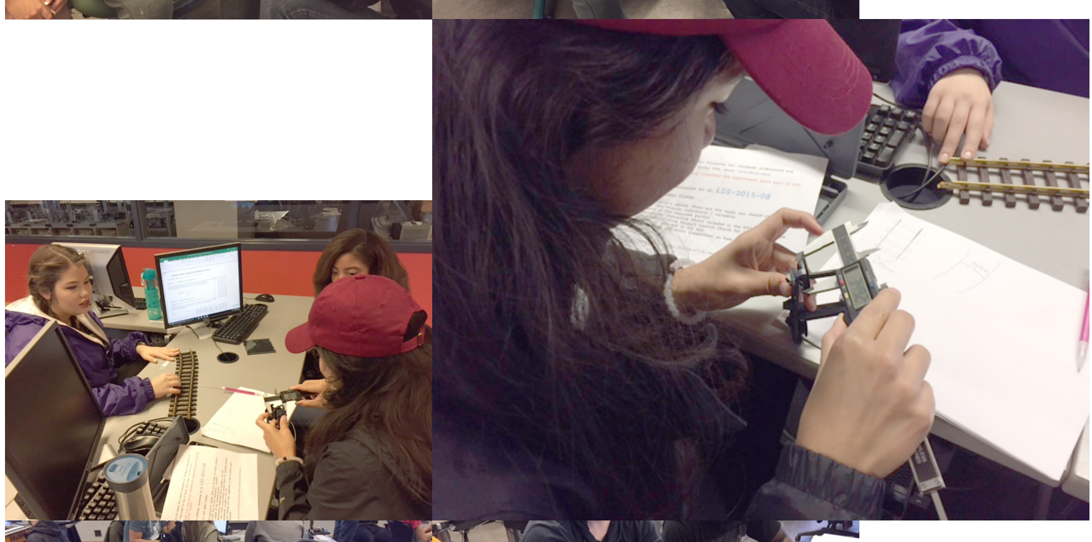

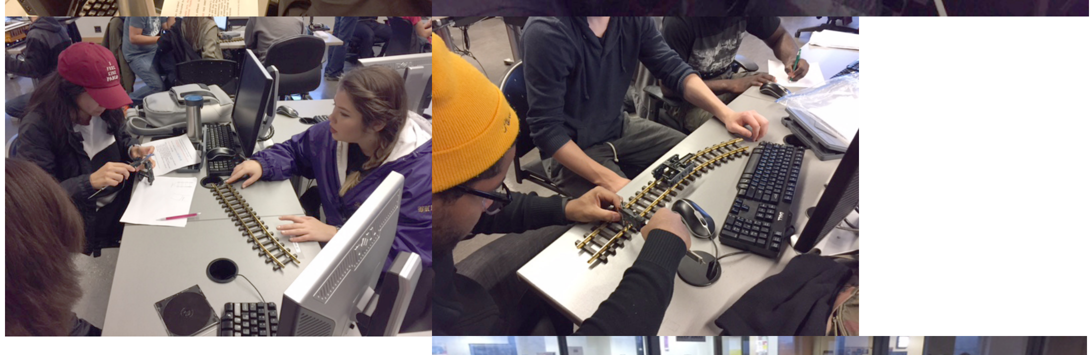

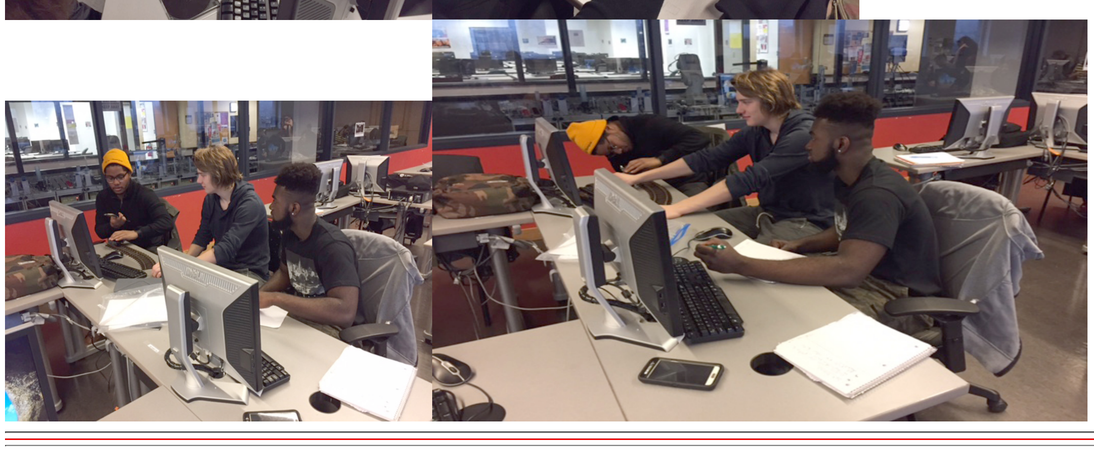

Some more student laboratory activity in pictures in this live class include the following:

Computer Controlled Machine Programming, Based on Object-oriented Principles: CNC laboratory preparation information:
Please explore this site for some useful information on our computer controlled CNC machines and related object-oriented machine programming methods, tools and technologies. Haas Automation Inc. USA is kindly sponsoring us. Their machines are widely used by USA universities, as well as industry all around the world. (We have now access to our IME CNC machine, as well as to the NJIT Makerspace computer controlled machines. This modern facility enables us to learn more about object-oriented programming, testing, validation and even quality control, with a strong focus on the integration of systems.)

Our machines are similar to what you will see here:

http://www.haascnc.com/home.asp#gsc.tab=0

Also, there is some useful info. on CNC programming and software here:

https://www.cnccookbook.com/cnc-software/?utm_source=ActiveCampaign&utm_medium=email&utm_content=21+kinds+of+CNC+software%3F++%5B+learn+what+each+one+does+%5D&utm_campaign=21KindsOfCNCSoftware

EXPLORE and enjoy!

Computer Controlled Machine Programming and Computer Graphics, Based on Object-oriented Principles: CNC laboratory preparation information in the NJIT Makerspace (live class setting):

The **NJIT Makerspace** is a wonderful computer controlled $18+ million advanced machine laboratory for students, faculty and industry.

In this class we have access to this amazing lab., and can see, explore and **learn more about object-oroiented computer controlled machine programming**, including testing our programs on advanced computers, integrated with machines, including: CNC milling, turning, EDM, waterjet cutting, computer controlled inspection and quality control, various 3D printing machines, and others. We also focus on visual factory management, computer graphics in IE, real-time, feedback controlled, flexible, lean, zero defect quality processes, on-demand product manufacturing, and all those wonderful principles we learn in this class. We can also see some advanced demonstrations in this lab.

The goal here is not to teach technology, for the sake of technology (that is a different class), but to use this amazing facility to **reinforce our object-oriented systems thinking approach, as well as use these machines to validate our computer programs with real, physical parts.**

Note, that this is a novel approach. Universities typically teach object-oriented (OO) thinking and programming to computing science and IT/IS (Information Technology / Information Systems) students, using computers only. In this class we are going a lot further. We don't just teach OO thinking and programming, but we do it with advanced computer integrated machines, like 3 axis and 5 axis CNC milling machines, 3 axis and 4 axis CNC lathes, 3 axis controlled waterjet cutters, 3D rapid prototyping machines / 3D printers, multi-axis CMMs, Co-ordinate Measuring Machines, with contact, as well as non-contact probes, and others. This is because our students in this class are industrial engineers who benefit enormously by undertstanding and following OO thinking and programming methods and skills.

In order to help our students to succeed in an advanced, global world, this is the time when we also introduce the **basic concepts of object-oriented Java programming, and Python programming with examples.** Students learn how to program simple engineering challenges in these well known and very popular OO languages. Then, we also compare them to what we have already learned when programming our advanced, multi-axis controlled machines, using OO principles. This offers a full 360 view of OO thinking, analysis and design and prepares them for other classes, like simulation, and others, where they benefit of having gone through these problem solving challenges in this class.

Also note, that this facility is planning to offer **machine-operator certificates** to NJIT students, so that they can program, and run their programs / test their programs on these advanced computer controlled machines safely.

This class is also preparing you for this extra step, in case you want to take advantage of this wonderful opportunity! (Please note, that the reason for this is because **industry needs professional problem solving engineers, and the more 'well rounded' you are the more marketable you become** because you can analyze, design, program, and manage better. We don't want you to become machine operators, nevertheless we want you to see the big picture better, as well as be able to dig deeper and understand the details too... this is the concept of the 'T' shaped professional... pls. see my notes earlier.) The fact of the matter is, that the more you learn about these systems, a better engineer you become!

During these **active-participation focused labs.** we encourage you to ask any questions you have and be as active as you can. This is a great, active, case-based, problem-based learning opportunity!

(For your kind information, I spent over 35 years actively designing and programming advanced computer controlled cells and systems like these, with automated processing, material handling, real-time, computer controlled production control and logistics, dynamic scheduling, robotics, material storage and inspection, and yes, even 'object-oriented programming', that was part of my PhD research in the early 1970s, when object-oriented programming started in the computing world but nobody heard about it in engineering; my PhD was the first, researching and implementing / validating OO programming for entire Flexible Manufacturing Systems, representing a large group of computer controlled machines with all additional capabilities and facilities, like automated tool and part changing, automated material handling, on-demand dynamic scheduling, real-time changing production control systems, 100% part inspection (aiming zero defect production!), computer controlled storage, and others. I encourage you to ask any challenging and 'out-of-the-box thinking' hard questions you have during these labs. because we'll all learn from your questions.)

Please review some of the **pictures I took with one of my NJIT classes in this lab.** (Please note, that this lab. is continuously developing and evolving, therefore you can always see and learn new things here.):

The NJIT Makerspace, a NEW hi-tech teaching and research facility, laboratory and resource for students and faculty to innovate, create, prototype, set up new R&D ventures, for students to create startup companies, and many others. A truly amazing facility!

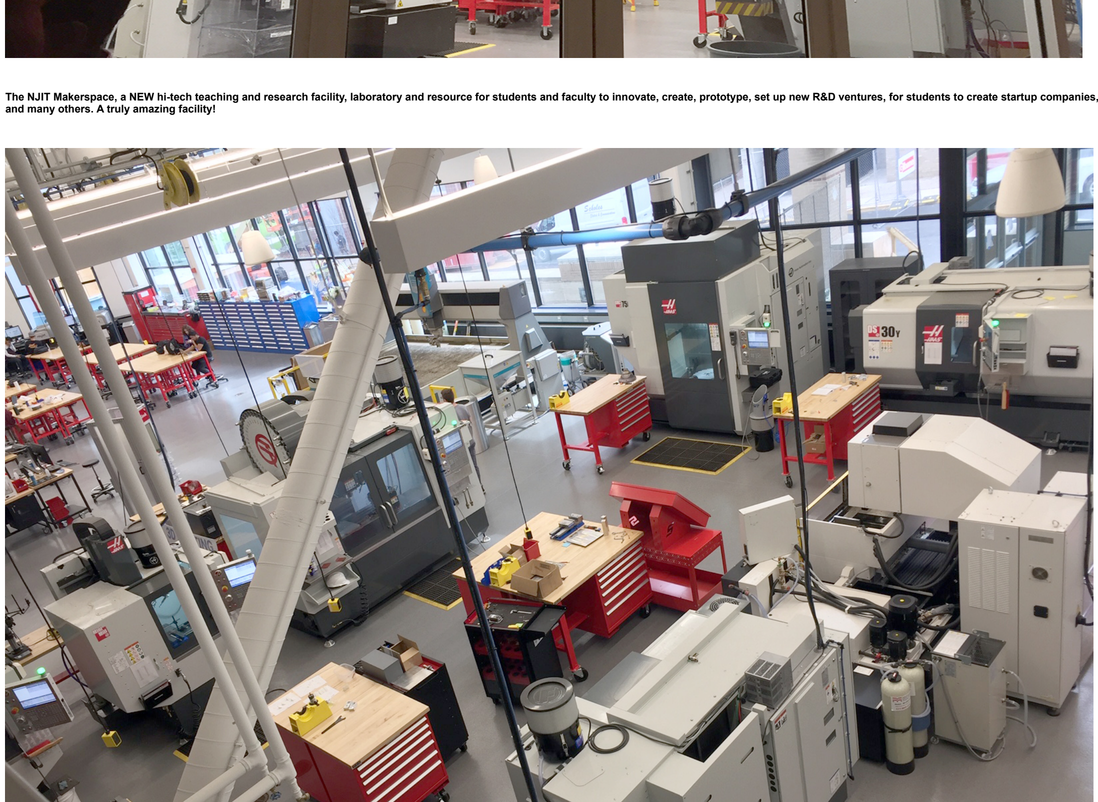

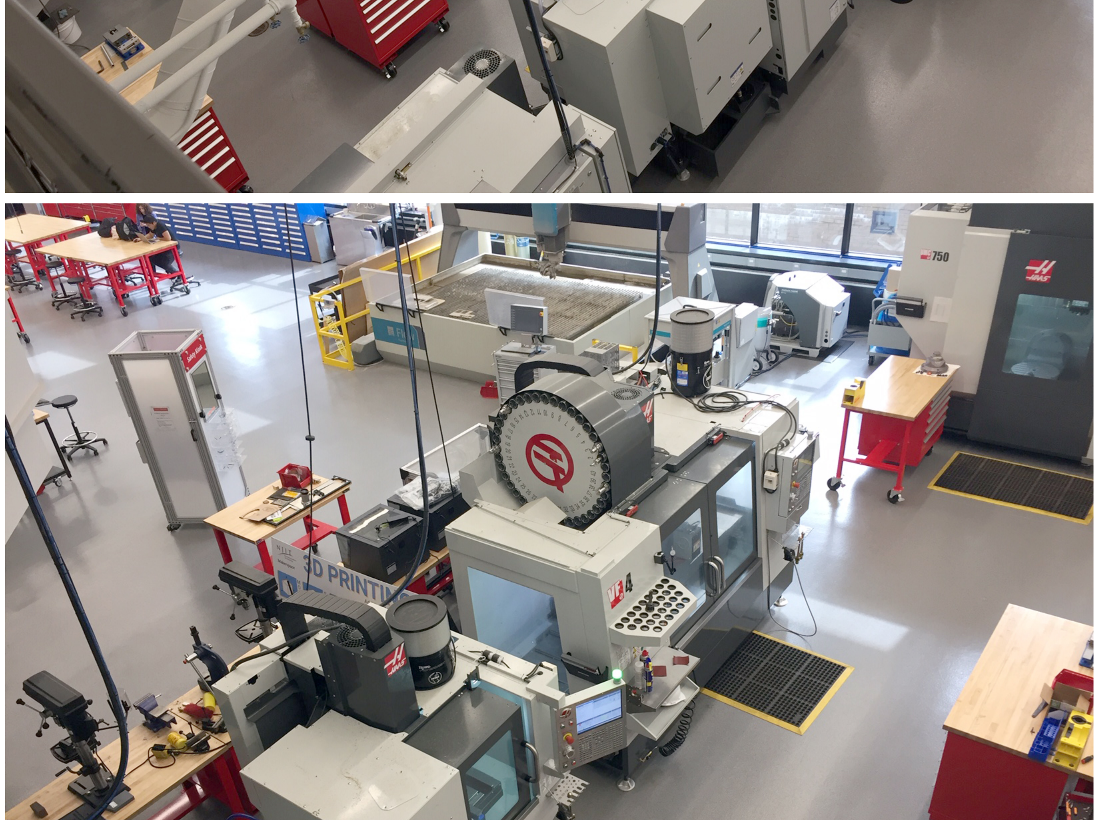

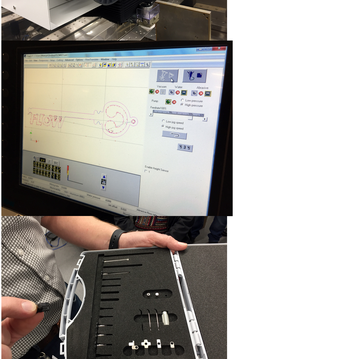

Assignment 3: (DRY) April 24: Assessment of your Final students, also, communication skills and the presentations in class! **Present the entire body of work you have created during this seminar in this class.**

Your presentation by individual students includes the following:

(1) introduction to yourself, (2) the 3R category, and how you have collaborated with the 3 companies offered in the eLearning Pack, the

(3) Research, analysis, design, process modeling

(3) Small objects, Arcs

(4) Assembly / assembly exercise, the

(5) Pulse-o-pulse (maintenance and organizer) included, the

(6) CNC milling 'E' code (including the mathematical analysis of the CNC lathe's tool by calculus connection) programming related exercises, and the

(7) Lastly, have applied the learned (previously) methods and concepts for your company (i.e. the 3R company).

Please focus on new, innovative aspects: methods, tools and technologies you have mastered. Each student has now 10 minutes to present (depending on time). Please do not miss your scheduled presentation time, as this is the last assignment for the Advanced Manufacturing class!

For Anonymous, please make sure, that you email your final work with ZIP, etc. to the instructor, for final assessment of your work, you have accomplished in this class. Thanks!

Seminars: the seminars during the first part of classes, following Chris Mabrey's lectures, of Kaizens, should extend to suggestions, in this class, on existence the following:

Kaizen, Poka-Yoke, Jidoka, Andon, Andon Board, Andon Board Lamp, Andon Board Lamp Signal, Andon Board Lamp Signal Light, Andon Board Lamp Signal Light Signal, Andon Board Lamp Signal Light Signal Light, Andon Board Lamp Signal Light Signal Light Signal, Andon Board Lamp Signal Light Signal Light Signal Light, Andon Board Lamp Signal Light Signal Light Signal Light Signal, Andon Board Lamp Signal Light Signal Light Signal Light Signal Light, Andon Board Lamp Signal Light Signal Light Signal Light Signal Light Signal, Andon Board Lamp Signal Light Signal Light Signal Light Signal Light Signal Light, Andon Board Lamp Signal Light Signal Light Signal Light Signal Light Signal Light Signal, Andon Board Lamp Signal Light Signal Light Signal Light Signal Light Signal Light Signal Light, Andon Board Lamp Signal Light Signal Light Signal Light Signal Light Signal Light Signal Light Signal, Andon Board Lamp Signal Light Signal Light Signal Light Signal Light Signal Light Signal Light Signal Light, Andon Board Lamp Signal Light Signal Light Signal Light Signal Light Signal Light Signal Light Signal Light Signal, Andon Board Lamp Signal Light Signal Light Signal Light Signal Light Signal Light Signal Light Signal Light Signal Light, Andon Board Lamp Signal Light Signal Light Signal Light Signal Light Signal Light Signal Light Signal Light Signal Light Signal, Andon Board Lamp Signal Light Signal Light Signal Light Signal Light Signal Light Signal Light Signal Light Signal Light Signal Light, Andon Board Lamp Signal Light Signal Light Signal Light Signal Light Signal Light Signal Light Signal Light Signal Light Signal Light Signal, Andon Board Lamp Signal Light Signal Light Signal Light Signal Light Signal Light Signal Light Signal Light Signal Light Signal Light Signal Light, Andon Board Lamp Signal Light Signal Light Signal Light Signal Light Signal Light Signal Light Signal Light Signal Light Signal Light Signal Light Signal, Andon Board Lamp Signal Light Signal Light Signal Light Signal Light Signal Light Signal Light Signal Light Signal Light Signal Light Signal Light Signal Light, Andon Board Lamp Signal Light Signal Light Signal Light Signal Light Signal Light Signal Light Signal Light Signal Light Signal Light Signal Light Signal Light Signal, Andon Board Lamp Signal Light Signal Light Signal Light Signal Light Signal Light Signal Light Signal Light Signal Light Signal Light Signal Light Signal Light Signal Light, Andon Board Lamp Signal Light Signal Light Signal Light Signal Light Signal Light Signal Light Signal Light Signal Light Signal Light Signal Light Signal Light Signal Light Signal, Andon Board Lamp Signal Light Signal Light Signal Light Signal Light Signal Light Signal Light Signal Light Signal Light Signal Light Signal Light Signal Light Signal Light Signal Light, Andon Board Lamp Signal Light Signal Light Signal Light Signal Light Signal Light Signal Light Signal Light Signal Light Signal Light Signal Light Signal Light Signal Light Signal Light Signal, Andon Board Lamp Signal Light Signal Light Signal Light Signal Light Signal Light Signal Light Signal Light Signal Light Signal Light Signal Light Signal Light Signal Light Signal Light Signal Light, Andon Board Lamp Signal Light Signal Light Signal Light Signal Light Signal Light Signal Light Signal Light Signal Light Signal Light Signal Light Signal Light Signal Light Signal Light Signal Light Signal, Andon Board Lamp Signal Light Signal Light Signal Light Signal Light Signal Light Signal Light Signal Light Signal Light Signal Light Signal Light Signal Light Signal Light Signal Light Signal Light Signal Light, Andon Board Lamp Signal Light Signal Light Signal Light Signal Light Signal Light Signal Light Signal Light Signal Light Signal Light Signal Light Signal Light Signal Light Signal Light Signal Light Signal Light Signal, Andon Board Lamp Signal Light Signal Light Signal Light Signal Light Signal Light Signal Light Signal Light Signal Light Signal Light Signal Light Signal Light Signal Light Signal Light Signal Light Signal Light Signal Light, Andon Board Lamp Signal Light Signal Light Signal Light Signal Light Signal Light Signal Light Signal Light Signal Light Signal Light Signal Light Signal Light Signal Light Signal Light Signal Light Signal Light Signal Light Signal, Andon Board Lamp Signal Light Signal Light Signal Light Signal Light Signal Light Signal Light Signal Light Signal Light Signal Light Signal Light Signal Light Signal Light Signal Light Signal Light Signal Light Signal Light Signal Light, Andon Board Lamp Signal Light Signal Light Signal Light Signal Light Signal Light Signal Light Signal Light Signal Light Signal Light Signal Light Signal Light Signal Light Signal Light Signal Light Signal Light Signal Light Signal Light Signal, Andon Board Lamp Signal Light Signal Light Signal Light Signal Light Signal Light Signal Light Signal Light Signal Light Signal Light Signal Light Signal Light Signal Light Signal Light Signal Light Signal Light Signal Light Signal Light Signal Light, Andon Board Lamp Signal Light Signal Light Signal Light Signal Light Signal Light Signal Light Signal Light Signal Light Signal Light Signal Light Signal Light Signal Light Signal Light Signal Light Signal Light Signal Light Signal Light Signal Light Signal, Andon Board Lamp Signal Light

Week 7 Assignment Submission Form

Assessing Root Resources for this exercise: (list the scientific name and the effective answer provided by Root)

Learning objectives/techniques for an 'elevator pitch' of your project/ideas: (your little company)
Identify a problem/need/opportunity (in your little company) that you can address with a product or service
Identify a potential customer (in your little company) who would be willing to pay for your product or service
Identify a potential competitor (in your little company) who could have a product or service that addresses the same need
Identify a potential partner (in your little company) who could help you with your product or service
Hypothesize a value proposition (in your little company) for a product or service that addresses the need, for the customer, while avoiding the competition and using the partner
Hypothesize a minimal pilot (in your little company) to test the value proposition, with the customer, using the product or service
Hypothesize a commercial pilot (in your little company) focus, people are listening (with their hearts, ears and brains) to hear how the camera shoot or video conferencing. Your smile should be honest and real. Talk (audio) to your customer (in your little company) to learn how they would prefer to pay for your product or service
Hypothesize a business model (in your little company) that can deliver the product or service to the customer, and capture some of the value for your little company
**Identify an expansion revenue (for your little company) that could be a logical follow-on product or service to the initial product or service, that could be a logical follow-on product or service, that could be a logical follow-on product or service, that could be a logical follow-on

exercices and also in almost every class by means of real-world factory tour videos, that we discuss in detail, in an interactive fashion. This way students learn these concepts and can develop an active design experience too, that they can document in their assignments. This is a semester long activity, effecting every assignment. (Note, that some of this concepts are very new to most students, therefore they initially resist, and then gradually accept, understand, learn and actively apply and the best even develop furthe these methods and ideas as part of their 'own' (i.e. the 5th company) activities...)

USA (ANSI) and International Standards (ISO) and how these standards can be used in this class

In this class we also put a lot of emphasis on USA and international standards, that help us and guide our IE design, VFM and operation control decisions. In almost all cases these well researched and well written standards help us in our visual factory management / computer graphics in IE efforts too.

Please try to incorporate what you have learned from at least one of these standards into your assignments. (Please note, that the NJIT Library has a massive collection of standards if you want to read the full text.)

This is a good sample of standards, that are very useful for all of us to learn (please note, that if a link does not work, pls. search the key terminology as indicated, on the web.):

ANSI Safety Standards

BS OHSAS 18001 / BS OHSAS 18002 Occupational Health and Safety Package (British Standard) ...

Environment, Health, and Safety Management System Standards

Environment, health, and safety (EHS) standards play a key role in the overall standards environment, protecting employees and employers alike.

ISO 45001: Occupational Health and Safety Standard (More: https://www.nqa.com/en-us/certification/standards/iso-45001) ISO 45001 is the world's international standard for occupational health and safety, issued to protect employees and visitors from work-related accidents and diseases. ISO 45001 certification was developed to mitigate any factors that can cause employees and businesses irreparable harm. Its standards are the result of great effort by a committee of health and safety management experts who looked closely at a number of other approaches to system management — including ISO 9001 and ISO 14001. In addition, ISO 45001 was designed to take other existing occupational health and safety standards, such as OHSAS 18001, into account — as well as the ILO's labor standards, conventions and safety guidelines. Especially geared toward senior management, ISO 45001 has the ultimate goal of helping businesses provide a healthy and safe working environment for their employees and everyone else who visits the workplace. This goal can be achieved by controlling factors that could potentially lead to injury, illness and — in extreme situations — even death. As a result, ISO 45001 is concerned with mitigating any factors that are harmful or that pose a danger to workers' physical and/or mental well-being.

ISO to Develop New Global Occupational Health and Safety Standard

Jul 24, 2013 ... ISO to Develop New Global Occupational Health and Safety Standard. ANSI and ASSE seeking U.S. stakeholders to support the standard's ...

Environment, Health, and Safety Management System Standards

Environment, health, and safety (EHS) standards play a key role in the overall standards environment, providing a backbone for many other industry specific ...

Workplace Safety Standards Home

With welding's potential effects on health and safety, and given the large amounts of energy necessarily involved in welding, welding safety standards are vital in multiple engineering jobs IEs get involved with.

Workplace Safety Standards

Workplace safety standards represent a selection of programs, equipment, ... Code for power press operation: Health, safety, and safeguarding requirements ...

ANSI Members Support Children's Eye Health and Safety Month ...

Aug 1, 2016 ... August marks Children's Eye Health and Safety Month, a time to pay closer ... members that have developed standards related to eye safety.

ANSI to Sponsor International Consumer Product Health and Safety ...

Apr 13, 2006 ... The American National Standards Institute (ANSI) has announced its intention to sponsor the 13th annual meeting and training symposium of …

ISO 9000 FAMILY – QUALITY MANAGEMENT
Standards Popular standards ISO 9000 family – Quality management ISO 9000 family - Quality management The ISO 9000 family addresses various aspects of quality management and contains some of ISO's best known …

ISO 14001 ENVIRONMENTAL MANAGEMENT
Standards Popular standards ISO 14001 Environmental management ISO 14000 family - Environmental management The ISO 14000 family of standards provides practical tools for companies and organizations of all kinds looking to manage ...

Please note, that our Disassembly Exercises in this class give us a good opportunity to think more 'sustainable green / non-toxic' too. This standard is a good example for medical devices: ISO 10993-17:2002: Biological Evaluation Of Medical Devices - Part 17: Establishment Of Allowable Limits For Leachable Substances. ISO 10993-17:2002 specifies the determination of allowable limits for substances leachable from medical devices. It is intended for use in deriving standards and estimating appropriate limits where standards do not exist. It describes a systematic process through which identified risks arising from toxicologically hazardous substances present in medical devices can be quantified. ISO 10993-17:2002 is not applicable to devices that have no patient contact (e.g. in vitro diagnostic devices). Exposure to a particular chemical substance may arise from sources other than the device, such as food, water or air. ISO 10993-17:2002 does not address the potential for exposure from such sources.

As an example, in 2000 we have started to use the ISO 9000 family of ISO standards. Since then, we have introduced new standards, as above, as part of the engineering thinking process, dealing with guidelines, opportunities, as well as constraints. The Disassembly Exercise offers us also a good opportunity to look into the sustainable green / toxic aspects of parts / processes of devices we disassemble and perhaps plan to re-manufacture or recycle at some stage.

About Engineering Ethics and Morals...

Engineering ethics is a very important part of every assignment in this class. Engineering ethics is the field of system of moral principles that apply to the practice of engineering. The field examines and sets the obligations by engineers to society, to their clients, and to the profession.

More here: (ref.: https://www.tutorialspoint.com/engineering_ethics/engineering_ethics_introduction.htm)

Generic (meaning not just IE/engineering focused) NJ ethical education videos offered by the State of NJ can be found here:
https://www.nj.gov/ethics/training/online/index.html

Engineering is the process of developing an efficient mechanism (based on science) which quickens and eases the work using limited resources, with the help of technology. Ethics are the principles accepted by the society, which also equate to the moral standards of human beings. An engineer with ethics, can help the society in a better way.

Hence the study of Engineering ethics, where such ethics are implemented in engineering by the engineers, is necessary for the good of the society. Engineering Ethics is the study of decisions, policies and values that are morally desirable in engineering practice and research.

Engineering design **ethics concerns issues** that arise during the design of technological products, processes, systems, and services. This includes **issues** such as safety, sustainability, user autonomy, and privacy. **Ethical** concern with respect to technology has often focused on the user phase. (More here: https://www.encyclopedia.com/science/encyclopedias-almanacs-transcripts-and-maps/engineering-design-ethics)

Morals
The word "Morality" originates from the Latin word "mos" meaning "custom". Morals are the principles or habits with respect to right or wrong of one's own conduct. They are not imposed by anyone. Morals are what you think is good and bad personally.
Though morals are not imposed, they can be understood as the preaching of our inner self. Depending on a few factors, our mind filters things as good or bad. These are the ideas that help frame our personality so that we can distinguish between what is right and what is wrong.

A moral is the code of conduct that you develop over time and set for yourself to follow, just like
* Being good to everyone
* Speaking only the truth
* Going against what you know is wrong
* Avoid cheating
* Being a nice human being etc.

Morals are always defined by one's own personality. Morals can be changed according to one's beliefs as they are completely dependent on one's perception towards the ethical values.

Ethics
The word "Ethics" originates from the Greek word "ethos" meaning "character". Ethics are a set of rules or principles that are generally considered as standards or good and bad or right and wrong, which are usually imposed by an external group or a society or a profession or so. Ethics can be understood as the rules of conduct proposed by a society or recognized with respect to a particular class of human actions or a particular group or culture. Ethics are dependent on others definition. They may or may not vary from context to context.

More here: (ref.: https://www.tutorialspoint.com/engineering_ethics/engineering_ethics_introduction.htm)

As an example, in our assignments and presentations during the past 20+ years this course run, students learned about ethics and morals during their social networking assignments, when they set up their own companies and it's web page, when they are disassembling devices, when they have to review full length videos, during the NJIT Makerspace lab. visits (started in 2019), during the zero defect quality exercises (started in 2016 with ASQ support), during our digital factory networking discussions when we also talk about cybersecurity issues (IIoT, and Industry 4.0 aspects, started in 2017), when they are creating their 3D process models, and during their interactive class presentations. Engineering ethics and morals becomes this way an integrated part of this class.

More examples for ethics: Society of Industrial and Systems Engineering:

IISE endorses the Canon of Ethics provided by the Accreditation Board for Engineering and Technology.

The Fundamental Principles

Engineers uphold and advance the integrity, honor and dignity of the engineering profession by:

1. Using their knowledge and skill for the enhancement of human welfare;

2. Being honest and impartial, and serving with fidelity the public, their employers and clients;

3. Striving to increase the competence and prestige of the engineering profession; and

4. Supporting the professional and technical societies of their disciplines.

The Fundamental Canons

1. Engineers shall hold paramount the safety, health and welfare of the public in the performance of their professional duties.

2. Engineers shall perform services only in the areas of their competence.

3. Engineers shall issue public statements only in an objective and truthful manner.

4. Engineers shall act in professional matters for each employer or client as faithful agents or trustees, and shall avoid conflicts of interest.

5. Engineers shall build their professional reputation on the merit of their services and shall not compete unfairly with others.

6. Engineers shall associate only with reputable persons or organizations.

7. Engineers shall continue their professional development throughout their careers and shall provide opportunities for the professional development of those engineers under their supervision.

Also, IEEE (USA) ethics: Ref.: https://www.ieee.org/about/corporate/governance/p7-8.html

The following is from the IEEE Policies, Section 7 - Professional Activities (Part A - IEEE Policies). 7.8 IEEE Code of Ethics

We, the members of the IEEE, in recognition of the importance of our technologies in affecting the quality of life throughout the world, and in accepting a personal obligation to our profession, its members, and the communities we serve, do hereby commit ourselves to the highest ethical and professional conduct and agree:

1. to hold paramount the safety, health, and welfare of the public, to strive to comply with ethical design and sustainable development practices, and to disclose promptly factors that might endanger the public or the environment;

2. to avoid real or perceived conflicts of interest whenever possible, and to disclose them to affected parties when they do exist;

3. to be honest and realistic in stating claims or estimates based on available data;

4. to reject bribery in all its forms;

5. to improve the understanding by individuals and society of the capabilities and societal implications of conventional and emerging technologies, including intelligent systems;

6. to maintain and improve our technical competence and to undertake technological tasks for others only if qualified by training or experience, or after full disclosure of pertinent limitations;

7. to seek, accept, and offer honest criticism of technical work, to acknowledge and correct errors, and to credit properly the contributions of others;

8. to treat fairly all persons and to not engage in acts of discrimination based on race, religion, gender, disability, age, national origin, sexual orientation, gender identity, or gender expression;

9. to avoid injuring others, their property, reputation, or employment by false or malicious action;

10. to assist colleagues and co-workers in their professional development and to support them in following this code of ethics.

Changes to the IEEE Code of Ethics will be made only after the following conditions are met:

• Proposed changes shall have been published in THE INSTITUTE at least three (3) months in advance of final consideration by the Board of Directors, with a request for comment, and

• All IEEE Major Boards shall have the opportunity to discuss proposed changes prior to final action by the Board of Directors, and

• An affirmative vote of two-thirds of the votes of the members of the Board of Directors present at the time of the vote, provided a quorum is present, shall be required for changes to be made.

CODE OF ETHICS (ASQ)

Introduction

The purpose of the American Society for Quality (ASQ) Code of Ethics is to establish global standards of conduct and behavior for its members, certification holders, and anyone else who may represent or be perceived to represent ASQ.

In addition to the code, all applicable ASQ policies and procedures should be followed. Violations to the Code of Ethics should be reported. Differences in work style or personalities should be first addressed directly with others before escalating to an ethics issue.

The ASQ Professional Ethics and Qualifications Committee, appointed annually by the ASQ Board of Directors, is responsible for interpreting this code and applying it to specific situations, which may or may not be specifically called out in the text.

Disciplinary actions will be commensurate with the seriousness of the offense and may include permanent revocation of certifications and/or expulsion from the society.

Fundamental Principles

- ASQ requires its representatives to be honest and transparent.
- Avoid conflicts of interest and plagiarism.
- Do not harm others.
- Treat them with respect, dignity, and fairness.
- Be professional and socially responsible.
- Advance the role and perception of the Quality professional.
- Expectations of a Quality Professional

Act with Integrity and Honesty

- Strive to uphold and advance the integrity, honor, and dignity of the Quality profession.
- Be truthful and transparent in all professional interactions and activities.
- Execute professional responsibilities and make decisions in an objective, factual, and fully informed manner.
- Accurately represent and do not mislead others regarding professional qualifications, including education, titles, affiliations, and certifications.
- Offer services, provide advice, and undertake assignments only in your areas of competence, expertise, and training.

Demonstrate Responsibility, Respect, and Fairness

- Hold paramount the safety, health, and welfare of individuals, the public, and the environment.
- Avoid conduct that unjustly harms or threatens the reputation of the Society, its members, or the Quality profession.
- Do not intentionally cause harm to others through words or deeds.
- Treat others fairly, courteously, with dignity, and without prejudice or discrimination.
- Act and conduct business in a professional and socially responsible manner.
- Allow diversity in the opinions and personal lives of others.

Safeguard Proprietary Information and Avoid Conflicts of Interest

- Ensure the protection and integrity of confidential information.
- Do not use confidential information for personal gain.
- Fully disclose and avoid any real or perceived conflicts of interest that could reasonably impair objectivity or independence in the service of clients, customers, employers, or the Society.
- Give credit where it is due.
- Do not plagiarize.
- Do not use the intellectual property of others without permission.
- Document the permission as it is obtained.

Some important code of ethics in PDF too (since unfortunately often, webmasters change web site URLs without notice... and then a link becomes a Link Error 404...):

IE-Ethics.pdf

ASQ-Code-Of-Ethics-Fundamental-Principles.pdf

IEEE-Code-Of-Ethics.pdf

The-Ultimate-Guide-To-Professionalism-com.pdf

Professional-Code-of-Ethics-Definition-and-Examples-com.pdf

The Boeing 737 Max Use Case...

Boeing Charged with 737 Max Fraud Conspiracy and Agrees to Pay over $2.5 Billion

The Boeing Company (Boeing) has entered into an agreement with the Department of Justice to resolve a criminal charge related to a conspiracy to defraud the Federal Aviation Administration's Aircraft Evaluation Group (FAA AEG) in connection with the FAA AEG's evaluation of Boeing's 737 MAX airplane.

Boeing, a U.S.-based multinational corporation that designs, manufactures, and sells commercial airplanes to airlines worldwide, entered into a deferred prosecution agreement (DPA) in connection with a criminal information filed today in the Northern District of Texas. The criminal information charges the company with one count of conspiracy to defraud the United States. Under the terms of the DPA, Boeing will pay a total criminal monetary amount of over $2.5 billion, composed of a criminal monetary penalty of $243.6 million, compensation payments to Boeing's 737 MAX airline customers of $1.77 billion, and the establishment of a $500 million crash-victim beneficiaries fund to compensate the heirs, relatives, and legal beneficiaries of the 346 passengers who died in the Boeing 737 MAX crashes of Lion Air Flight 610 and Ethiopian Airlines Flight 302.

"The tragic crashes of Lion Air Flight 610 and Ethiopian Airlines Flight 302 exposed fraudulent and deceptive conduct by employees of one of the world's leading commercial airplane manufacturers," said Acting Assistant Attorney General David P. Burns of the Justice Department's Criminal Division. "Boeing's employees chose the path of profit over candor by concealing material information from the FAA concerning the operation of its 737 Max airplane and engaging in an effort to cover up their deception. This resolution holds Boeing accountable for its employees' criminal misconduct, addresses the financial impact to Boeing's airline customers, and hopefully provides some measure of compensation to the crash-victims' families and beneficiaries."

"The misleading statements, half-truths, and omissions communicated by Boeing employees to the FAA impeded the government's ability to ensure the safety of the flying public," said U.S. Attorney Erin Nealy Cox for the Northern District of Texas. "This case sends a clear message: The Department of Justice will hold manufacturers like Boeing accountable for defrauding regulators – especially in industries where the stakes are this high."

"Today's deferred prosecution agreement holds Boeing and its employees accountable for their lack of candor with the FAA regarding MCAS," said Special Agent in Charge Emmerson Buie Jr. of the FBI's Chicago Field Office. "The substantial penalties and compensation Boeing will pay, demonstrate the consequences of failing to be fully transparent with government regulators. The public should be confident that government regulators are effectively doing their job, and those they regulate are being truthful and transparent."

"We continue to mourn alongside the families, loved ones, and friends of the 346 individuals who perished on Lion Air Flight 610 and Ethiopian Airlines Flight 302. The deferred prosecution agreement reached today with The Boeing Company is the result of the Office of Inspector General's dedicated work with our law enforcement and prosecutorial partners," said Special Agent in Charge Andrea M. Kropf, Department of Transportation Office of Inspector General (DOT-OIG) Midwestern Region. "This landmark deferred prosecution agreement will forever serve as a stark reminder of the paramount importance of safety in the commercial aviation industry, and that integrity and transparency may never be sacrificed for efficiency or profit."

As Boeing admitted in court documents, Boeing—through two of its 737 MAX Flight Technical Pilots—deceived the FAA AEG about an important aircraft part called the Maneuvering Characteristics Augmentation System (MCAS) that impacted the flight control system of the Boeing 737 MAX. Because of their deception, a key document published by the FAA AEG lacked information about MCAS, and in turn, airplane manuals and pilot-training materials for U.S.-based airlines lacked information about MCAS.

Boeing began developing and marketing the 737 MAX in or around June 2011. Before any U.S.-based airline could operate the new 737 MAX, U.S. regulations required the FAA to evaluate and approve the airplane for commercial use.

In connection with this process, the FAA AEG was principally responsible for determining the minimum level of pilot training required for a pilot to fly the 737 MAX for a U.S.-based airline, based on the nature and extent of the differences between the 737 MAX and the prior version of Boeing's 737 airplane, the 737 Next Generation (NG). At the conclusion of this evaluation, the FAA AEG published the 737 MAX Flight Standardization Board Report (FSB Report), which contained relevant information about certain aircraft parts and systems that Boeing was required to incorporate into airplane manuals and pilot-training materials for all U.S.-based airlines. The 737 MAX FSB Report also contained the FAA AEG's differences-training determination. After the 737 MAX FSB Report was published, Boeing's airline customers were permitted to fly the 737 MAX.

Within Boeing, the 737 MAX Flight Technical Team (composed of 737 MAX Flight Technical Pilots) was principally responsible for identifying and providing to the FAA AEG all information that was relevant to the FAA AEG in connection with the FAA AEG's publication of the 737 MAX FSB Report. Because flight controls were vital to flying modern commercial airplanes, differences between the flight controls of the 737 NG and the 737 MAX were especially important to the FAA AEG for purposes of its publication of the 737 MAX FSB Report and the FAA AEG's differences-training determination.

In and around November 2016, two of Boeing's 737 MAX Flight Technical Pilots, one who was then the 737 MAX Chief Technical Pilot and another who would later become the 737 MAX Chief Technical Pilot, discovered information about an important change to MCAS. Rather than sharing information about this change with the FAA AEG, Boeing, through these two 737 MAX Flight Technical Pilots, concealed this information and deceived the FAA AEG about MCAS. Because of this deceit, the FAA AEG deleted all information about MCAS from the final version of the 737 MAX FSB Report published in July 2017. In turn, airplane manuals and pilot training materials for U.S.-based airlines lacked information about MCAS, and pilots flying the 737 MAX for Boeing's airline customers were not provided any information about MCAS in their manuals and training materials.

On Oct. 29, 2018, Lion Air Flight 610, a Boeing 737 MAX, crashed shortly after takeoff into the Java Sea near Indonesia. All 189 passengers and crew on board died. Following the Lion Air crash, the FAA AEG learned that MCAS activated during the flight and may have played a role in the crash. The FAA AEG also learned for the first time about the change to MCAS, including the information about MCAS that Boeing concealed from the FAA AEG. Meanwhile, while investigations into the Lion Air crash continued, the two 737 MAX Flight Technical Pilots continued misleading others—including at Boeing and the FAA—about their prior knowledge of the change to MCAS.

On March 10, 2019, Ethiopian Airlines Flight 302, a Boeing 737 MAX, crashed shortly after takeoff near Ejere, Ethiopia. All 157 passengers and crew on board died. Following the Ethiopian Airlines crash, the FAA AEG learned that MCAS activated during the flight and may have played a role in the crash. On March 13, 2019, the 737 MAX was officially grounded in the U.S., indefinitely halting further flights of this airplane by any U.S.-based airline.

As part of the DPA, Boeing has agreed, among other things, to continue to cooperate with the Fraud Section in any ongoing or future investigations and prosecutions. As part of its cooperation, Boeing is required to report any evidence or allegation of a violation of U.S. fraud laws committed by Boeing's employees or agents upon any domestic or foreign government agency (including the FAA), regulator, or any of Boeing's airline customers. In addition, Boeing has agreed to strengthen its compliance program and to enhanced compliance program reporting requirements, which require Boeing to meet with the Fraud Section at least quarterly and to submit yearly reports to the Fraud Section regarding the status of its remediation efforts, the results of its testing of its compliance program, and its proposals to ensure that its compliance program is reasonably designed, implemented, and enforced so that it is effective at deterring and detecting violations of U.S. fraud laws in connection with interactions with any domestic or foreign government agency (including the FAA), regulator, or any of its airline customers.

The department reached this resolution with Boeing based on a number of factors, including the nature and seriousness of the offense conduct; Boeing's failure to timely and voluntarily self-disclose the offense conduct to the department; and Boeing's prior history, including a civil FAA settlement agreement from 2015 related to safety and quality issues concerning the Boeing's Commercial Airplanes (BCA) business unit. In addition, while Boeing's cooperation ultimately included voluntarily and proactively identifying to the Fraud Section potentially significant documents and Boeing witnesses, and voluntarily organizing voluminous evidence that Boeing was obligated to produce, such cooperation, however, was delayed and only began after the first six months of the Fraud Section's investigation, during which time Boeing's response frustrated the Fraud Section's investigation.

The department also considered that Boeing engaged in remedial measures after the offense conduct, including: (i) creating a permanent aerospace safety committee of the Board of Directors to oversee Boeing's policies and procedures governing safety and its interactions with the FAA and other government agencies and regulators; (ii) creating a Product and Services Safety organization to strengthen and centralize the safety-related functions that were previously located across Boeing; (iii) reorganizing Boeing's engineering function to have all Boeing engineers, as well as Boeing's Flight Technical Team, report through Boeing's chief engineer rather than to the business units; and (iv) making structural changes to Boeing's Flight Technical Team to increase the supervision, effectiveness, and professionalism of Boeing's Flight Technical Pilots, including moving Boeing's Flight Technical Team under the same organizational umbrella as Boeing's Flight Test Team, and adopting new policies and procedures and conducting training to clarify expectations and requirements governing communications between Boeing's Flight Technical Pilots and regulatory authorities, including specifically the FAA AEG. Boeing also made significant changes to its top leadership since the offense occurred.

The department ultimately determined that an independent compliance monitor was unnecessary based on the following factors, among others: (i) the misconduct was neither pervasive across the organization, nor undertaken by a large number of employees, nor facilitated by senior management; (ii) although two of Boeing's 737 MAX Flight Technical Pilots deceived the FAA AEG about MCAS by way of misleading statements, half-truths, and omissions, others in Boeing disclosed MCAS's expanded operational scope to different FAA personnel who were responsible for determining whether the 737 MAX met U.S. federal airworthiness standards; (iii) the state of Boeing's remedial improvements to its compliance program and internal controls; and (iv) Boeing's agreement to enhanced compliance program reporting requirements, as described above.

About Continuous Improvement in this Class...

Continuous / continual Improvement, or CI, is a very important part of every assignment in this class.

Continuous Improvement is an ongoing effort to improve your organization's products, services, and/or processes. ... Gradual – seek "incremental" improvement over time. "Breakthrough" improvement all at once.

In the ISO 9001 standard, the requirement for continual improvement (CI) is defined in clause 8.5.1 "Continual Improvement". Continual Improvement can be initiated through the use of quality policy, quality objective, audit results, analysis of data, corrective and preventive actions and management review.

In the ISO 9001 standard, the requirement for continual improvement (CI) is defined in clause 8.5.1 "Continual Improvement". Continual Improvement can be initiated through the use of quality policy, quality objective, audit results, analysis of data, corrective and preventive actions and management review. This requirement covers both the reactive and proactive action of improvement.

The reactive action are those actions taken to address nonconformities of products, processes and systems such as the correction taken on nonconformity or a defect and the follow-up corrective action to remove the root causes of the nonconformity. This is referred to as problem solving or problem resolution process and is a reactive action.

Continual improvement, however, refers to actions taken to optimize a specific characteristic or a set of characteristics even though performance of the characteristics may be at the acceptable level to the customer or the organization. This is very important concept in management practices as it is a way to prevent an organization from becoming complacent when all outcomes are acceptable. Continual improvement drives the organization to continually address ways to reduce costs, improve organizational performance and customer satisfaction.

In process management, the basis for CI is in the managing of variation. Variation is the fluctuation of the output of a process, sometimes called noise. Every repeatable process exhibits variation. Improvement of any process is to reduce variation so that the process can consistently meet expectation of either the internal customers or external customers. Studying variation leads to managing it, as this will help to identify the source of a problem and to establish the action most likely to resolve it.

Understanding variation involves identifying whether the variation is due to common causes or special causes. Common cause variation is systemic, built into the process or system. The variation is random, with its average value and boundaries being predictable (i.e. the variation around the average level is call random). The causal factors of common cause variation are unknown, and therefore, reducing such variation requires fundamental changes to the process or system. Common cause variation requires a long term strategy of process management to identify, understand and reduce it. It provides opportunity for Continual Improvement initiative.

As an example, in 2019 we have started to use the amazing new NJIT Makerspace facility / lab. complex to illustrate students the way an ideal digital smart factory / digital / networked factory could look like. In 2020 and beyond, this component of the class gradually increases. We also show and encourage students to get seriously involved with visual factory management / computer graphics applications in IE, computer controlled object-oriented machine programming, additive manufacturing devices, computer controlled quality control machines and devices, laser cutting machines, waterjet machines, and other real-time, feedback controlled systems. We also provide academic as well as technician support for our students to do the above during their tenure, including sometimes NSF funded UG research, at NJIT, in the Makerspace facility / lab.

About Strategic Implementation Plan on STEM Diversity in this Class...

November 2019: White House Releases Strategic Implementation Plan on STEM Diversity. These concepts are widely communicated in this class: The Strategic Plan presents a vision for a future where all Americans will have lifelong access to high quality STEM education and the United States will be the global leader in STEM literacy, innovation, and employment.

It is intended to serve as a "North Star" for the broader STEM community as it collectively charts a course for the Nation's success and is responsive to the requirements of Section 101 of the America COMPETES Reauthorization Act of 2010.

These are the main goals, that are being actively pursued to support the Strategic Plan's overarching vision:

1. Build Strong Foundations for STEM Literacy by ensuring that every American has the opportunity to master basic STEM concepts and to become digitally literate.

2. Increase Diversity, Equity, and Inclusion in STEM and provide all Americans with lifelong access to high-quality STEM education, especially those historically underserved and underrepresented in STEM fields and employment.

3. Prepare the STEM Workforce for the Future—both college-educated STEM practitioners and those working in skilled trades that do not require a four-year degree—by creating authentic learning experiences that encourage and prepare learners to pursue STEM careers.

The Strategic Plan is organized around four pathways, representing a cross-cutting set of approaches to improve STEM education that will help fulfill its vision and achieve its three goals. These concepts are widely communicated in this class:

1. Develop and Enrich Strategic Partnerships – Strengthen relationships between educational institutions, industry, community organizations to leverage resources for the purpose of providing the student with meaningful learning opportunities.

2. Engage Students where Disciplines Converge – Draw on knowledge and methods across disciplines to solve complex, real world problems in STEM using innovation, creativity, and initiative.

3. Build Computational Literacy – Design integrated approaches to teaching and learning computational thinking and promote digital literacy and cyber safety.

4. Operate with Transparency and Accountability – Develop and apply metrics that assess progress in meaningful ways and disseminate them to external stakeholders.

In 2019 we have started to use the amazing new NJIT Makerspace facility / lab. complex to integrate the above concepts and requirements into this class. In 2020 and beyond we have the opportunity to integrate the above principles, concepts, methods, tools and technologies even more into our classes. This will offer 'loop closing' opportunities (i.e. feedback control loops), because students will be able to test ideas, principles, methods and others learned in this class in a real-life digital factory-like large laboratory. By using the NJIT Makerspace we can also offer students more opportunities to actively design systems for real-world applications.

Most importantly enjoy this class!