Copyright Warning & Restrictions

The copyright law of the United States (Title 17, United States Code) governs the making of photocopies or other reproductions of copyrighted material.

Under certain conditions specified in the law, libraries and archives are authorized to furnish a photocopy or other reproduction. One of these specified conditions is that the photocopy or reproduction is not to be "used for any purpose other than private study, scholarship, or research." If a, user makes a request for, or later uses, a photocopy or reproduction for purposes in excess of "fair use" that user may be liable for copyright infringement,

This institution reserves the right to refuse to accept a copying order if, in its judgment, fulfillment of the order would involve violation of copyright law.

Please Note: The author retains the copyright while the New Jersey Institute of Technology reserves the right to distribute this thesis or dissertation

Printing note: If you do not wish to print this page, then select "Pages from: first page # to: last page #" on the print dialog screen

NJIT
New Jersey's Science & Technology University

The Van Houten library has removed some of the personal information and all signatures from the approval page and biographical sketches of theses and dissertations in order to protect the identity of NJIT graduates and faculty.

ABSTRACT

A DYNAMIC SUPINE STANDER FOR SUBJECTS WITH DISABILITIES LEADING TO PROLONGED IMMOBILITY

by
Luis Alberto Espina

Bone tissue needs to be exposed to loading in order to stimulate the osteogenic response of the body. Disabilities that lead to prolonged immobility will result in a decrease of the osteogenic processes and an increase in resorption of bone by osteoclast cells. This disuse modeling can lead to osteopenia, osteoporosis, and subsequent non-traumatic fractures. These disabilities are varied in nature and duration, and can include load bearing bone fracture, excessive obesity, spinal cord injury, and cerebral palsy.

The following describes the concept and design of a novel dynamic supine stander that will provide loads simulating ambulation to the lower extremities of subjects that have disabilities causing prolonged immobility. The device provides full body support while using computer-controlled actuators to apply the loads.

The current configuration is meant for pediatric cerebral palsy patients. These patients are prone to osteoporosis due to disuse modeling of their bones from prolonged immobility. The device can be reconfigured for different body types and sizes.

A DYNAMIC SUPINE STANDER FOR SUBJECTS WITH DISABILITIES LEADING TO PROLONGED IMMOBILITY

by
Luis Alberto Espina

A Thesis
Submitted to the Faculty of
New Jersey Institute of Technology
in Partial Fulfillment of the Requirements for the Degree of
Master of Science in Biomedical Engineering

Department of Biomedical Engineering

January 2007

APPROVAL PAGE

A DYNAMIC SUPINE STANDER FOR SUBJECTS WITH DISABILITIES LEADING TO PROLONGED IMMOBILITY

Luis Alberto Espina

Dr. Richard A. Foulds, Thesis Advisor — Date
Associate Professor of Biomedical Engineering, NJIT

Dr. Bruno A. Mantilla, Committee Member — Date
Special Lecturer of Biomedical Engineering, NJIT

Dr. Sergei Adamovich, Committee Member — Date
Assistant Professor of Biomedical Engineering, NJIT

BIOGRAPHICAL SKETCH

Author: Luis Alberto Espina

Degree: Master of Science

Date: January 2007

Undergraduate and Graduate Education:

- Master of Science in Biomedical Engineering,
  New Jersey Institute of Technology, Newark, NJ, 2007

- Bachelor of Engineering in Mechanical Engineering,
  Stevens Institute of Technology, Hoboken, NJ, 2001

Major: Biomedical Engineering

Para mi querida Rubia.

ACKNOWLEDGMENT

I would like to express my deep appreciation to Dr. Richard A. Foulds for his assistance and guidance not only as an advisor but for his wonderful talent as a professor. My deepest gratitude to Dr. Sergei Adamovich for his time and effort in being part of my review committee and for the research training he built into his classes. The early exposure to research and the instruction on the proper methods for presenting information are invaluable tools that I will utilize throughout my career. I wish extend a special thank you to Bruno A. Mantilla, M.D. Dr. Mantilla has tirelessly served as advocate, advisor, guide, and voice of reason throughout this project. Dr. Mantilla is also an example of the kind of physician that I hope to become one day. I also owe a great deal of thanks to the staff at the Specialized Children's Hospital in Mountainside, NJ, especially Sheila Blochlinger and Lucy Santiago. Their time, willingness to open their doors to my research, and the wonderful work that they perform on a daily basis were strong motivators during this process.

An incredible amount of thanks is due to my family, without whom none of this would have been possible. Mami, Jennifer, Chava, Sofia, and Leo; you all are the sources of energy and drive that make the good things in life possible. Thank you for never losing faith in me and my dream. Thank you so much for the support and patience you have given me during this journey.

TABLE OF CONTENTS

Chapter	Page
1 INTRODUCTION	1
1.1 Objective	1
1.2 Background Information	1
1.2.1 Anatomy, Physiology, and the Mechanostat of Bone	2
1.2.2 Cerebral Palsy	10
1.2.3 Reduced Bone Mass, Osteopenia, and Osteoporosis	13
2 CONCEPT AND DESIGN	15
2.1 Concept	15
2.2 Design Phase	17
2.2.1 Structure	18
2.2.2 Pneumatic Circuit	22
2.2.3 Computer Control Circuit	24
2.2.4 Electrical Circuitry	26
2.2.5 Fabrication	28
3 CALIBRATION ACTIVITIES	33
3.1 Calibration of the Load Cell	33
3.2 Calibration of the Pneumatic Circuit	34
3.3 Calibration and Programming of Digital Recording and Trigger Values	35
4 VALIDATION STRATEGIES	37

TABLE OF CONTENTS
(Continued)

Chapter	Page
5 CONCLUSION	40
APPENDIX Drawings & Schematics	41
REFERENCES	48

LIST OF FIGURES

Figure		Page
1.1	Schematic of the Negative Feedback Loop for Frost's Mechanostat Hypothesis	8
2.1	Isometric View of Base Frame	19
2.2	Elevation of Dynamic Stander in Horizontal Position	22
2.3	Wiring Schematic	27

CHAPTER 1

INTRODUCTION

1.1 Objectives

The following delineates the research, development, and design of a novel dynamic supine stander. This stander is intended to serve as a non-pharmacological therapy device for subjects with ambulatory disabilities and or prolonged immobility. This population is vulnerable to development of osteopenia due to disuse remodeling of their load bearing bones.[32,35] The intent is for the device to impart loads to the lower limbs of the subject that simulate those experienced during ambulation. The current design is focused for use with pediatric cerebral palsy patients with varying degrees of gross motor function impairment ranging from Class I to Class V.[32] The base actuator and control mechanism of the device and its structural configuration is readily adapted to different patient populations including adults.

1.2 Background

Medical conditions that result in prolonged immobility have a myriad of root causes and durations. They include but are not limited to things such as a broken load bearing bone, spinal cord injury, motor skill degeneration brought on by advancing age, and non-progressive neurological insult such as cerebral palsy. A broken femur may only result in a brief convalescence, where diplegia, resulting from cerebral palsy, is a lifelong impairment. Their root causes may be different but the conditions all share one common result; the lack of loading will cause bone resorption to outpace bone generation. The

resulting osteopenia can and often does progress to a fully developed osteoporosis which often results in non-traumatic fracture of the bones. These non-traumatic fractures further aggravate the situation by necessitating even more immobility. This vicious cycle that consists of a progression through immobility-osteopenia-osteoporosis-non-traumatic fracture-further immobility-even greater osteoporosis is a trend that requires some action or therapy be taken to stem or even reverse its progress.

In the interest of establishing a baseline for discussion of this situation and revealing some of the background that led to the design of the stander, the next few sections will give a brief review of the anatomy, physiology, and control aspects of bone. There is also information on some of the prevalent treatment protocols for osteopenia resulting from disuse of the load bearing bones. Lastly some information is presented relating to cerebral palsy and the application of the stander for this patient population.

1.2.1 Anatomy, Physiology, and the Mechanostat of Bone Tissue

Bone tissue makes up the majority of the skeleton which provides the structural component of the body and facilitates movement. The skeleton's design principles share many commonalities with an airplane's fuselage. They both have to provide structure and protection while remaining as light as possible in order to maximize efficiency and performance. The geometry and specific mechanical performance are also tailored to the function of each individual component. Though the landing gear and a fuselage stringer on a fabric covered aircraft may both be made of the same tubular steel; one may be rectangular in cross section while the other is round and of different wall thicknesses. This specificity to function is also evident in the body. The femur and the humerus are somewhat similar in movement but their features, dimensions, and geometry are tailored

to the muscle groups attached to them, the forces that they normally experience, and the range of motion that they provide.

Bone tissue and the skeleton perform six fundamental functions which are: [36]

- **Support**- The framework for the body and its soft tissues. It serves as the anchor point for the various skeletal muscles.
- **Protection**- Creates hard shields which protect various soft tissues. An example is the cranial vault which functions as a "helmet" for the soft brain.
- **Assist in Movement** - The skeleton and its bones are arranged as linkages which when actuated by the muscles produce movement and mechanical advantage.
- **Mineral Homeostasis**- Site of Calcium, phosphorous, and other mineral storage which can be released to the blood as needed, maintaining necessary balances.
- **Site of blood cell production**- Specific sites are the location of red bone marrow which is the source of red blood cells, white blood cells, and platelets. Red bone marrow contains adipose cells and macrophages in addition to immature blood cells.
- **Storage of energy**- Lipids stored in yellow bone marrow serve as chemical storage of energy.

The structure of the skeleton consists of bone tissue, cartilage, red and yellow bone marrow, and periosteum.[36] The focus of this thesis and the target of impact for the dynamic stander is centered on the long bones of the leg. The basic structure of a human long bone is as follows:

- **Diaphysis**- The shaft area.
- **Epiphyses**- The distal and proximal extremities of a long bone.
- **Metaphysis**- Region where the diaphyses and epiphysis meet. This is the area in growing bone in which one finds the epiphyseal plate which is the location of longitudinal growth for long bones.
- **Articular cartilage**- Thin layer of hyaline cartilage that covers the epiphysis and serves as the articulation surface in the joints.
- **Periosteum**- A membrane found on long bone surfaces that are not covered in articular cartilage. The outer fibrous layer contains blood vessels, lymphatic vessels, and nerves that pass into the bone through Volkmann's canals. The inner osteogenic layer contains elastic fibers, blood vessels, and bone cells. It also serves as the attachment point for ligaments and tendons.
- **Medullary**- Open center of diaphyses that is the location of the yellow bone marrow in adults.
- **Endosteum**- Lining of the medullary canal. This membrane contains osteoprogenitor cells and osteoclasts.

Bone tissue is a matrix of 25% water, 25% protein, and 50% mineral salts. This arrangement is similar to a fiber composite material. The protein (collagen) serves as the fiber matrix with the mineral salts crystallizing and hardening to form the cured resin function. The fluid in the bone flows through the canaliculi, moving oxygen, nutrients, wastes, and functioning in mechanotransduction in response to strain in the bone from external, gravitational, and voluntary muscle loads.

There are four types of cells in bone tissue which are the osteoprogenitor, osteoblasts, osteocytes, and osteoclasts. Osteoprogenitor are unspecialized mesenchymal cells that are the precursor to the other cell types and can undergo mitosis. They are found in the inner layer of the periosteum, the endosteum, and in the canals in the bone that contain blood vessels.[36] Osteoblasts are cells that form bone but have lost the ability to undergo mitosis. They secrete collagen and other organic components needed for osteogenesis. After maturity the osteoblasts develop into osteocytes. The osteoblast rests on the surface of the bone secreting matrix materials which they eventually are encased in. Upon becoming trapped in the matrix materials the osteoblasts mature into osteocytes. Osteocytes no longer secrete matrix materials but continue cellular activities of nutrient and waste exchange with the blood. Osteoclasts are the cells responsible for bone resorption by destroying matrix materials and releasing the materials back into circulation.

Bone comes into two basic types known as cortical (compact) and cancellous (spongy). Cortical bone is densely packed and is the external layer of all the bones in the body and the bulk of the diaphyses of the long bones. It provides the structural component of long bones resisting voluntary muscle, gravitational, and impact loads.

The cross section of cortical bones reveals a group of concentric rings that make up rods (osteons) that run longitudinally in long bones. These osteons are bundled together resembling a handful of pencils surrounding the hollow region of the medullary. Closer inspection shows that each osteon also has a central (Haversian) canal. These Haversian canals are surrounded by concentric lamellae that are made up of osteocytes that are situated in hollow spaces within the lamellae known as lacunae. The lacunae are interconnected and connected to the Haversian canal by canaliculi. Together, the Haversian canal, surrounding lamellae, lacunae, canaliculi, and osteocytes make up a single osteon. The spaces between the closely bundled osteons are known as interstitial lamellae that also have lacunae and osteocytes within them. The interstitial lamellae are pieces of osteons that are undergoing resorption.

The modeling mechanisms that are balanced by resorption have two basic patterns. Intramembranous ossification occurs directly from mesenchymal cells within a loose fibrous structure of connective tissue. An example of this would be the ossification of the fontanels in the infant skull. Endochondral ossification consists of the replacement of a cartilage structure with bone. It is the method by which most bones, especially long bones, develop in the fetus. A generalized outline of the bone is formed from hyaline cartilage in the fetus. The mapping of this cartilage base model is laid out in the genetic instructions of the developing fetus. Length increases are generated by interstitial growth. This interstitial growth can be seen throughout fetal development up until the person stops growing at the end of puberty. Ossification begins at the center of the cartilage model and works towards the epiphysis of the long bone. This primary ossification center is complemented by secondary centers that migrate towards the

epiphyses. The primary center develops bone inward while development moves outward in the secondary centers. This outward development allows the retention of the hyaline cartilage on the proximal and distal ends which provide a low friction surface for articulation. This also leaves the epiphyseal plate at the juncture of the diaphysis and the epiphysis. This epiphyseal plate is the locus of further lengthening in the long bones as the person develops from birth to adulthood. Growth in diameter of a developing bone occurs by appositional growth. The bone lining the medullary canal is destroyed increasing the inner diameter of the long bone. Simultaneously there is a deposit of osteoblasts from the inner layer of the periosteum on the outer surface of the bone.[36]

The bone formation and resorption cycles are continuous and dynamic. These antagonistic processes work to maintain the balance and function of bone in response to the constantly changing stimulus that the bones are subject to. If the resorption circuit were disabled then the bones would develop unnecessary growths, excessive length, and excessive weight. If the osteogenic circuit is disabled you have continuous reduction of the wall thickness of the bone leading to osteopenia, osteoporosis, and eventual breakage.

The basic theory for the activation of the modeling of bone was presented by Dr. Julius Wolff in 1892. Wolff's law states "every change in the form and the function of a bone, or in its function alone, is followed by certain definite changes in its internal architecture and secondary alterations in its external conformation; these changes usually represent responses to alterations in weight-bearing stresses."[37] This law describes bone modeling from an organ level of post natal bone. The cellular level mechanism was understood in the early 1900's with the description of osteoblasts and osteoclasts. The definition of osteoprogenitor and osteocytes added to the cellular level understanding of

bone modeling mechanisms. Advancement in the study of genetics will clarify and further define the mechanism that controls fetal bone mapping and development.

These organ and cellular level definitions of bone development led five assumptions:

- Osteoblasts and osteoclasts are the key players in bone physiology and act independently.
- Increased osteoclastic activity results in bone losses.
- Increased osteoblast activity results in bone gains.
- Biochemical and genetic factors made those key players determine bone architecture, remodeling, repair, amount of bone, and disorders.
- Bones demonstrated no important tissue level function.

The study and definition of the organ and cellular level functions led to the question of how bone operates on a tissue level. Further studies into stimulation of osteogenesis with Wolff's law as a basis led to discussions of mechanotransduction and the role of strain in control and stimulation of bone modeling.[9] When a bone is loaded there is some degree of strain in the material. Strain, defined as the change in length divided by the original length, is a unitless measure expressed by a percentage or a number without units.[9] Materials as resistant to deformation as bone have very small strains. These small strains are sufficient however, to cause the fluid in the canaliculi and interstitial spaces of bone, to move through the bone. This movement of the fluid, which contains mineral ions, generates action potentials. These action potentials are one of the stimuli that cause the osteogenic circuit to engage. The other portion of the strain induced osteogenesis is that of direct shear applied to the bone cells. This direct mechanical deformation of the cell may be the other stimulus required to initiate osteogenesis.

The bone mechanostat, coined by Harold Frost in 1983,[9] is a hypothesis that describes a negative feedback control system for the tissue level function of bone in

postnatal development. It posits that the osteoblast and osteoclast activity are not independent systems that are constantly running against each other but rather systems that are largely triggered by threshold strain values.[6,7,8,9,13,20,22,33] This hypothesis is the focus of work for a variety of researchers and continues to be developed today, even after the death of its author.

```
                    Bone health and strength
                              ↑
                              ↑  ,---MECHANICAL FEEDBACK LOOP---,
                              ↑  ↓                              ↑
CNS → Muscle → TPVMLs → BONE → SIGNALS → BIOLOGIC MECHANISMS
 ↑       ↑                 ↑        ↑            ↑
 `.............nonmechanical agents............'      Relation (2)
```

Figure 1.1 Schematic of Negative Feedback Loop for Frost's Mechanostat Hypothesis.[7]

During fetal and neonatal development there are limited loads applied to the skeleton. The fetus is suspended in fluid and newborns are not ambulatory nor do they possess significant motor control.[36] The effects of gravitational and voluntary muscle loads on the bones are therefore negligible. Bone development at these stages revolves around the mapping laid out in the genetic code of the body, nutritional factors, and the presence of any pathology. The bones of the individual do not have exposure to the particular loading that the individual will experience in life and therefore cannot be expected to develop bone accordingly.[9] The person that comes from a long family line of weight lifters will still have to lift weights themselves to develop the thick skeletal structure of their predecessors.

It is during the postnatal to adulthood years that bone develops in response to gravitational, voluntary muscle, and impact loads that the individual customarily imparts on its body. There is evidence that involvement in gymnastics, military training, etc. during these years develops stronger bone geometries and thicknesses.[7]

The nutritional health of the subject is certainly a consideration but not as critical as the exposure to loading. The loading serves to direct development while nutrition, hormonal, and other biological factors serve to facilitate development. The analogy made by Frost for relating postnatal bone development to nutrition was that while fuel in the tank of your car permitted it to run, it did not influence the direction of travel. Essentially the biological factors (genetics, hormones, etc.) regulate osteogenic activity while the triggers are found in the response to strains imposed on the bones. This negative feedback loop reads the input to the system and adjusts activity of the osteogenic and absorption mechanisms accordingly. Low strains that inhabit the resorption range (50-100 microstrain) would trigger an increase in osteoclast activity and diminish osteoblast activity. Higher strains that are in the modeling range (1000-1500 microstrain) would trigger an increase in osteoblast activity and decrease in osteoclast activity.[7] There is overlap in the functioning of the two systems; it is not an on/off type of activity.

The mechanostat responds not only to the loads imposed by gravity and the involuntary impulses of the anti-gravity muscles but also to the loads imparted by voluntary muscle contraction. Impact loads, such as those from high cadence running, also contribute to the strains that the mechanostat will respond to.[9]

The ranges presented above that trigger the mechanostat do not imply that all load bearing bones in all locations trigger in response to the exact same loads. The fracture

strength for most load bearing bones is 8000 microstrain. The loads and amplitude of the range of loads habitually experienced by different parts of the body are different and require adaptation. The mandible is a load bearing bone as well as the tibia. Yet the mandible does not experience as intense a strain load nor as wide a range of strain habitually as does the tibia on a daily basis.[7] This leads to the geometry and material dimensions of bone in different locations are optimized to the loads that they experience. The humerus and the femur are similar but their geometry and dimensions are adapted to the loading they normally endure. A blow that would snap the humerus would not necessarily have the same effect on the femur if delivered the same way.

1.2.2 Cerebral Palsy[33]

The current dynamic stander configuration is arranged with pediatric cerebral palsy patients in mind. Therefore some background on the condition and its effects on the bones of these patients merit some discussion.

Cerebral palsy is a non-progressive disorder resulting from a neurological insult to the brain. This insult can occur during fetal development up to two years of age.[33] Most of these injuries occur during the prenatal period and come from a variety of sources that are largely unknown. The injury can present during childbirth due to low birth weight, premature birth, asphyxia, and other causes of fetal distress. The condition is defined as non-progressive because it does not constitute a continuous degradation of the brain but rather a one time injury that is stationary in nature. The resulting impairments can have a progressive nature.

The majority of cerebral palsy patients present spasticity of one form or another as a result of the injury. Their motor impairment can manifest as diplegia, hemiplegia,

paraplegia, or even quadriplegia. They will have tremors, increased deep tendon reflexes, and muscular hypertonicity.[33] A smaller percentage will have athetoid cerebral palsy which is characterized by a lack of muscle tone and control along with abnormally slow wavelike spasm of the muscles. The smallest percentage presents ataxic cerebral palsy which is due to an insult occurring in the brain centers that relate to balance and coordination. These patients are ambulatory but walk with a wide-based gait and have intention tremors which cause them accuracy and precision problems in fine motor control situations.[33] Two thirds of these patients also have some cognitive impairment. There is also a great degree of overlap in the conditions with patients presenting more than one type of cerebral palsy.

The cognitive and motor control problems are the more obvious symptoms but there are further complications. Internal system function is frequently impaired in subjects that have some form of paralysis in the trunk and /or that are confined to a wheelchair due to ambulatory difficulties. Constant compression of the internal organs can cause deficiency in the function of the digestive, respiratory, and cardiovascular systems. There are also behavioral and self esteem issues related to the condition stemming both from perspective and life experience.

There are several different assessment scales related to clinical and quality of life evaluation for these patients. The one of specific interest for this thesis has been the Gross Motor Function Classification System for Cerebral Palsy Patients.[31,32] This system is applicable from ages one to twelve and assesses the ability of the subject to conduct self initiated movements. There are five classes of gross motor function that are used as assessment tools in the diagnosis of cerebral palsy and evaluation of treatment efficacy.

The five levels are repeated in groupings by age and expected development. They are up to the second birthday, between second and fourth birthday, between fourth and sixth birthdays, and between sixth and twelfth birthdays. Level I children are fairly mobile but lag behind children without cerebral palsy. They do not need assistive devices for mobility. Level II children can move about but require some assistive devices up to about age four. They have difficulty with running and jumping. Level III will require assistive devices but can self propel a wheelchair for short distances barring involvement of the upper limbs. They can walk indoors but require assistive devices and orthoses to do so. Long distances and uneven terrain require assistance. Level IV children will maintain the level of function achieved prior to six years of age. They require assistance to get in and out of chairs and will require a powered wheelchair to get around. Level V children will not progress beyond level of function achieved between their second and third birthdays. They lack independence due to a reliance on assistive devices even against gravitational loads. The child may move independently only if they can master a powered wheelchair.

These children are subject to a series of degenerative secondary conditions even though the initial injury is non-progressive. Oral control and function are often compromised which can lead to vomiting, reflux damaged upper GI tract, and dermatological conditions in areas surrounding the mouth due to constant salivary action and drooling, among others. These conditions can lead to malnutrition.[33] Often these children must placed on feeding tubes in order to provide sufficient nutrition for life. The lack of ambulation and circulation combined with these nutritional issues contribute to reduced bone mass, osteopenia, and osteoporosis.

1.2.3 Reduced Bone Mass, Osteopenia, and Osteoporosis

Osteopenia is defined as reduced calcification or density of bone.[1] Osteopenia has many causal factors and is not limited to persons with ambulatory impairment. Osteopenia will lead to osteoporosis which is a skeletal disorder that affects many tens of millions of people in the United States alone. This disorder is one that is not usually detected until the first non-traumatic fracture occurs. Traditionally it was viewed as an affliction of post-menopausal women that due to hormonal and lifestyle changes had deficiencies in mineral uptake or osteogenesis from a lack of loading. Osteoporosis occurs due to an imbalance in the generation/resorption of bone tissue. The causes can be nutritional, hormonal, side effect from medications, or lack of loading the load bearing bones.

The case of a cerebral palsy patient opens the door on several of those factors. Cerebral palsy patients generally have some difficulty with ambulation; markedly more from Level II up. The lack of stimulation from voluntary muscle contraction and involuntary anti-gravity muscle contraction lead to low strains and therefore increased osteoclast activity. The nutritional deficit can also impact the availability of material to synthesize bone tissue. Returning to Dr. Frost's analogy, a definite direction is fine, but no gas in the tank means you are not going to be moving. Many cerebral palsy patients are placed on anti-convulsive medication which can adversely affect Vitamin D uptake.[5] This combination of factors leads to the development of osteoporosis during the most critical years for bone development.

One of the assessment methods for diagnosis of osteopenia or even osteoporosis prior to the first non-traumatic fracture is by radiography. One very common technique is the use of dual x-ray absorptiometry. This method has the advantage of lower doses of

radiation as compared to Quantitative Computed Tomography, but cannot provide the three dimensional image of peripheral QCT.[19] DXA can determine the amount of bone mineral density (a surrogate measure of bone health) in a region by measuring the differential absorption of two rays of different energy levels in the same area.

The further complication of diminishing bone density in these patients is that fractures can and do exacerbate the condition. Fracture causes further immobility and changes in blood circulation that further tax the cerebral palsy patient's ability to maintain bone even further.

The factors discussed above all lead to a difficult prognosis for the patient that will be immobilized for long periods or permanently due to conditions like cerebral palsy. The body needs a healthy skeleton for protection and ambulation. The bones need the biological systems to be working properly but above all require stimulus to keep triggering the cells to maintain the correct balance of growth and resorption. Immobility is death to the bones from a variety of directions. It can impact the internal organs that move the nutrients. Immobility also maintains strains in the resorption threshold which will slow down the osteoblasts and increase the osteoclast activity. Exercise also contributes to increase the efficiency of circulation which causes all body systems to work better. A solution may lay in providing normally immobile patients the support necessary to expose their load bearing bones to stimulus that can slow or even stop the vicious cycle.

CHAPTER 2

CONCEPT AND DESIGN

2.1 Concept

The intent is to design a device that will address the bone loss suffered by patients with disabilities that are subject to prolonged immobility. The decision was made to focus the configuration on pediatric cerebral palsy patients. These children are subject to deficiencies in their bone structure as a result of the ambulatory problems they suffer. NJIT has access through the Children's Specialized Hospital in Mountainside, NJ, to a pool of candidates with whom to conduct a trial of the device.

The next consideration to be given is to definition of the mechanism by which bone loss could be treated. Literature review was conducted to establish a baseline of the causes and effects of osteoporosis in cerebral palsy patients. This review included possible treatment strategies for this skeletal disorder, with a view towards devices rather than pharmacological regimens.

There have been a limited number of randomized control trials using devices to stimulate maintenance or even generation of bone tissue.[1,22] These trials tend to focus on the use of static prone or supine standers as a means of exposing the child's gravitational load bearing bones to stimulus while providing support to the whole body. These devices, known generically, as standing frames, are structures that fix the child with restraints to a padded support which holds the body in a standing position. The padded support is generally held at some angle off of perpendicular due to this facilitating control of the trunk and head for these patients. The length of standing depends largely on the child's familiarity with the device, with a target time between thirty minutes and one

hour. The duration of standing in the frame seems to be a contributing factor towards increase in bone mineral density and treatment efficacy. Increases of 50% duration in the frame have shown improvement in vertebral DXA scans though not in the proximal tibia.[22] These improvements may be due to the increased mechanical stimulation coupled to improve systemic action from being in an upright position. The decision for the use of a prone or supine stander in these trials revolves around the degree of trunk and head control the child possesses. Supine standers incorporate head and trunk restraints where the prone stander design relies on the child's ability to control their head and trunk themselves.

Trials involving standers and even elastic body suits that attempt to replace the postural integrity of cerebral palsy patients with elastic bands working to pull the body into a straight position have shown some limited success in stimulating bone growth. The suggestion being that by exposing the child to gravitational loads while in an upright posture, the mechanostat will receive strains in the modeling threshold thereby triggering osteogenesis and slowing osteoclast activity.

Gudjonsdottir and Stemmons Mercer took this one step further by designing a dynamic standing frame. This frame consists of a prone standing frame with foot supports that move vertically under power from a battery powered motor through a cam device.[33,34] The trials were performed on four subjects and utilized a static prone stander as a control. Issues with the children's tolerance and their care givers compliance with the program may have limited the success of the trials. There were some increases in bone mineral density and behavioral improvements for the children in the dynamic stander.

These results led to the concept for this device which is a standing frame that incorporates an actuation system to apply loads to the subject's legs that will simulate ambulation. The device will provide full body support to the subject, isolate the child from any harmful sources or magnitudes of energy, and induce loading to the legs that simulate ambulation. The device is somewhat portable and compatible to a clinical or classroom environment.

2.2 Design Phase

The design process for this device began with web research on available standing frames and a visit to the Children's Specialized Hospital in Mountainside, NJ. The devices found in both searches provided a baseline on the industry standards and an opportunity to witness the frames in use. Input from the staff at the hospital and its affiliated school was invaluable in setting up parameters that the device would have to work within.

The initial design inputs for the device were as follows:

i. The child must be isolated from any electrical energy.
ii. The fail-safe mode would need to remove all loading from the child while maintaining full body support.
iii. There shall be easily accessible and clearly visible emergency stop switches that can be activated by the therapist or caregiver.
iv. There shall be electrical, algorithmic, and mechanical limits set into the device to prevent exposure of overloads to the subject.
v. The loading should be adjustable in magnitude, frequency, and displacement.
vi. Minimize noise levels given the nature of the expected operating environment, i.e. clinical setting, classrooms, hospitals.
vii. All effort to shield the device so as to not emit nor absorb electromagnetic energy in its control circuitry.
viii. The device should be mobile , yet allow for being safely stopped in one location.
ix. The device's overall width should fit through an average doorway.
x. The frame of the device should be designed to minimize the danger of tipping over.

xi. The subject contact surfaces should minimize the possibility of decubitus ulcers from friction.
xii. There shall be a method of recording the loads applied to the subject and loading them into a convenient format.
xiii. The control circuitry of the device should be such that one therapy is initiated, the therapist does not need to adjust or change settings, nor interact with the device other than to stop in case of emergency.
xiv. The actuators should have a cushion built into them so as to prevent impact loads to the subject's legs.
xv. The design of the base should allow close proximity of the therapist to the subject for monitoring purposes.
xvi. All edges should be dressed so as to not be able to cause injury to the subject, therapist, or any passing personnel.

These parameters formed the basis for the design. These design inputs are matched and govern the design outputs found in the traceability matrix in the appendix.. This is done in accordance with Chapter 21 of the Code of Federal Regulations Part 820 that governs medical devices.

2.2.1 Structure

The base structure needs to have a low center of gravity, be made of strong resilient materials, and be able to tolerate the possibility of fluid spillage, minor impact with walls, and be safe to handle for the caregiver.

The base frame for the stander consists of two gull wing shaped cross members that are made up of three inch diameter tubular steel with two parallel rectangular section steel tubes running longitudinally down the central axis of the base. Steel was selected for the base due to its high strength, resilience, and ease of machining and welding. This is the foundation on which the subject support is built. Its width is held to 30-1/2" in order to allow it to pass through most standard doorways. The gull wing shape of the cross members, in addition to aesthetic appeal, allows the use of 5 inch diameter wheels while maintaining the central keel section and therefore the center of gravity low to the

ground. This central keel arrangement also allows the therapist to stand close by the patient from either side. The narrow waist section permits reaching completely across the device so that the therapist does not find themselves having to walk all the way around the base frame in order to adjust or assist the subject. This assists in maintaining the resistance to tipping over while the 5 inch wheels will lower rolling resistance on carpeting. Attached to the central keel are four vertical pillars; two arranged along the longitudinal axis and two longer pillars arranged in a perpendicular fashion to the longitudinal axis. The shorter pillars serve as the vertical supports for the adjustment mechanism that takes the supine support from horizontal to vertical positions and any angle in between. The top piece that connects the two pillars serves as the anchor point for the horizontal shaft/linear bearing assembly that counteracts any binding in the screw jack angle adjuster mechanism. The two longer pillars arranged perpendicular to the longitudinal axis serve as the vertical supports to the pivot point for the supine support pad. The vertical cylindrical supports are made of 3 inch diameter steel in order to provide strength, provide ease of machinability, and ease of welding.

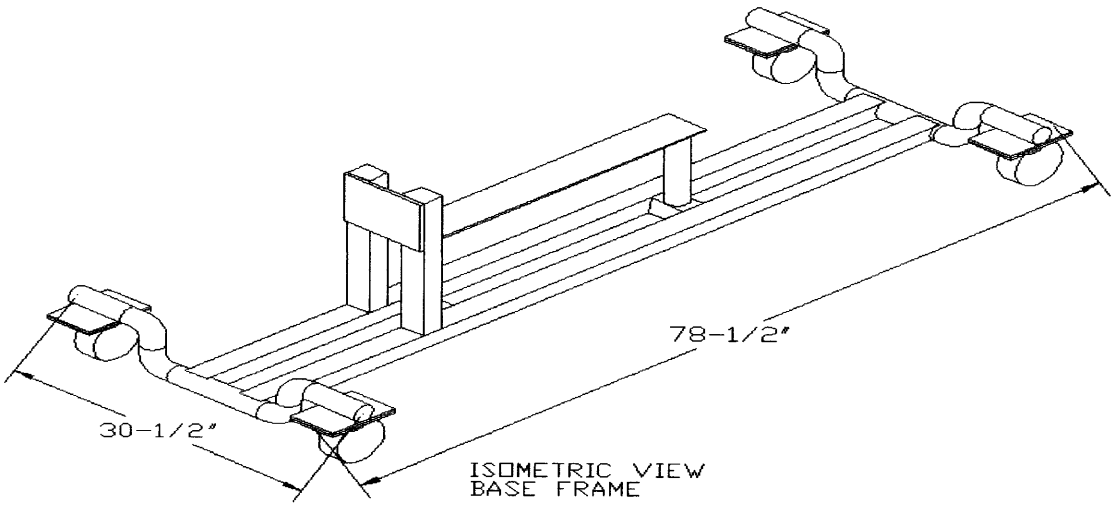

Figure 2.1 Isometric View of Base Frame.

There are two ¾" hollow linear bearing shafts in the base design. These shafts serve as the pivot for the supine support pad and as a preventative measure to eliminate binding in the screw jack angle adjustment mechanism.

The horizontal screw jack binding support is anchored by two elevated shaft supports and aligned with the longitudinal axis of the frame. This support is there because the angled actuator link that runs from the supine support to the end of the screw jack will impart side loads on the screw jack mechanism. These side loads can cause binding and premature wear on the screw necessitating the hollow shaft support and linear bearing. This will require less effort on the part of the therapist while turning the screw jack in order to position the supine support at the desired angle.

The horizontal shaft that is aligned perpendicularly to the longitudinal axis serves as the pivot for the supine support board. The screw jack adjuster, pivot point, and binding support are arranged to allow the supine board to pivot from the horizontal to the vertical position while maintaining a height from floor to the board surface of 21 inches when in the horizontal position. This height is compatible with those found in available supine standing frames and facilitates transfer of the subject from wheelchair or exercise table to the device.

The supine support board material is delrin with machined slots that serve as anchor and guide to the restraint straps, hip abductor pad, and trunk and head restraints. Delrin provides strength with great ease of machining and is easily cleaned. It also serves as an additional isolation from any electrical loads that could be within the frame due to a ground fault circumstance. The board is designed to accept standard restraint straps and accessories from available static supine standing frame manufacturers. The board is

backed by a 2"x 1" rectangular cross section steel frame that is welded together and connected to the pivot rod by elevated shaft supports. That rod is held onto the base frame by bushing style pillow block bearings that allow for smoother rotation about the shaft and lower the energy expenditure required to pivot the supine board with the subject on it. The pillow block bearings are bolted onto a cross piece found at the top of the vertical pivot point supports welded to the central keel of the base frame.

The foot support/actuator assembly is bolted to two L-shaped extensions that are part of the supine support board frame. This allows them to pivot along with supine board so that therapy can be conducted even in the horizontal position. The base plate that bolts to the L-shaped supine board frame extensions is made of aluminum. This material lowers the weight while still providing great strength and ease of machinability. There are eight linear bearing shafts threaded perpendicular to the plate surface. These linear bearing shafts serve as guides for two foot actuators. They eliminate any lateral play that may be possible given the nature of the air spring pneumatic actuators. These linear bearings ride in linear guide bearings that are located on the undersurface of the lower plate of the two foot pads. Each two level foot pad has a similar linear bearing and shaft assembly to prevent any lateral play of the top plate over the bottom plate of the foot rests. Elimination of side play will result in more accurate readings of from the load cells located between the top and bottom plate of each foot rest. The top plate of the foot rest is made of delrin in order to isolate the child from electrical energy. The bottom plate is made of aluminum in order to maintain integrity of the position and orientation of the vertical linear shafts that are threaded into it while maintaining light weight and a slim profile.

The initial design had the electrical and pneumatic accessories located directly on the base frame. This caused it to be large and presented a possible direct route for high amounts of electrical energy to come in contact with the subject. The decision to create an equipment cart to accompany the frame was then made. This cart houses all the electrical and pneumatic circuits with the exception of the load cells and the air springs. Given the low voltages and amperages associated with the load cells and the electrical isolation accomplished by the materials in contact with the subject the risk to the patient is negligible. The risk to the therapist is mitigated by placing all of the electrical circuits inside of an electrical enclosure.

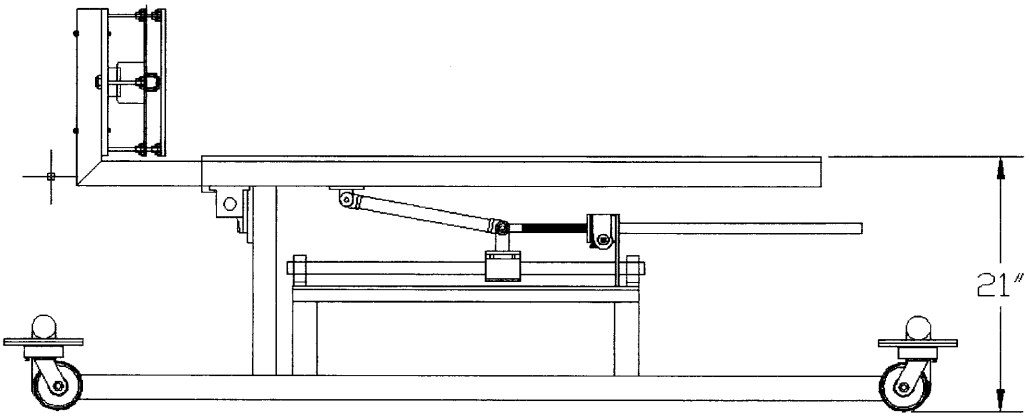

Figure 2.2 Elevation of Dynamic Stander in Horizontal Position.

2.2.2 Pneumatic Circuit

The intent of this device is to transmit mechanical loads to the subject that will cause strains that simulate those experienced during ambulation. This device accomplishes this by use of a pneumatic circuit that contains an individual air spring actuator for each foot. The loads are applied through computer control of the pneumatic valves and recorded and stored in a PC.

The power source for the circuit is a Jun Air OF302 based clean air compressor. This compressor is oil less, filtered, and installed in a sound deadening enclosure. The expense of this device is negligible when compared to the impact that a noisy and oil exhausting compressor could have in a clinical or classroom setting with subjects that may be suffering from respiratory difficulties. The enclosure also contains a 6.6 gallon reservoir tank that allows the compressor to remain off during a large part if not all of a given 30 minute therapy session. This minimizes noise and maximizes efficiency of the circuit.

Compressed air flows from the storage tank through a regulator to a manifold of four valves that control the actuators. These air piloted valves have lapped spools which allow them to work even with very low operating pressures. The advantage being that pediatric cerebral palsy patients may not weigh enough nor require loads high enough to operate the pneumatic circuit at high psi. The line pressure between the tank and the regulator will be 125psi while the regulator will be set to a value corresponding to the weight of the subject and the loads that the therapy protocol calls for. This regulator serves as a mechanical safety which will limit the amount of energy delivered to the subject in the event of computer failure. It is isolated from the electrical control and functions on a purely mechanical basis thus increasing the safety of the device.

The air piloted valves are arranged in pairs; one for each air spring. One serves as the exhaust and the other the intake. This arrangement allows an intake position, a pressure hold position, and a rapid exhaust position. The intake position has the exhaust solenoid energized to the closed position and the intake valve energized to the open position. The pressure hold position is achieved by de-energizing the intake valve

solenoid and maintaining the exhaust valve energized. Exhaust is achieved by de-energizing the exhaust solenoid and the intake solenoid. The normally closed status of the intake valve and the normally open wiring of the exhaust valve are selected as part of the fail safe of the design. In the event of power failure, the circuit defaults to exhaust mode and depressurizes the air springs. This removes the load from the patient while the supine support restraints keep the subject safely supported. The air valves are supplied by two independent circuits in order to allow cycling of the loading as in ambulation. The airflow proceeds from the exhaust valve to the environment by passing through silencer devices that are meant to lower the sound signature by up to 20dB.

2.2.3 Computer Control Circuit

The control of the therapy is accomplished by the use of a standalone programmable controller and a pair of load cells. The load cells are located between the top and bottom plate of the foot rests. They are located, one each, in the center of the lower foot rest plate with the top plate resting on top of it. These miniature compression load cells receive a small voltage and change their voltage output in response to the mechanical strain applied to their housing by the resistance of the child's foot on the top plate of the foot rest to the upward force applied by the air spring under the bottom plate of the foot rest. They are sandwiched between the two plates and are wired to a constant DC power source and an analog I/O terminal on the programmable controller.

The difference in the V_{out} as received by the Analog I/O terminal on the controller is monitored until it equals the set point programmed into the controller. When the set point is achieved the controller will signal the intake solenoid to de-energize, stopping inflow of air. It can then either give the command to hold pressure for a given

amount of time or de-energize the exhaust solenoid and release the pressure in the air spring. The reading of the V_{out} is picked up off the wires by jumpers and sent through a digital to analog converter to a PC for storage.

The programming of the Trol Systems programmable controller is in plain English and can be done directly in the controller by use of a small hand held device that plugs directly to the housing or by uploading a routine from a PC with the accompanying software. The ability of controller to be programmed by the small hand held remote is of great advantage in a situation where a therapist has several subjects undergoing treatment simultaneously on multiple standers. The programming can be set for each individual without need of using a PC at each station. One central PC can record the data from multiple devices while the hand held controller can customize the therapy routine on each individual stander.

The particular programming will require calibration of the load cells and air springs for different weights. Once the V_{out} vs. load curve is well defined the validation of the programming can begin. The routines can be set up to cycle both actuators simultaneously, one at a time, or to allow or disallow displacement of the subject's legs.

The restraints can be configured to allow the subject's legs to move with up and down with each loading cycle which requires the air spring to displace. The restraints can also be configured to keep the subject's legs in a fixed position and have the air spring increase in pressure without displacement. The control programming is similar with the difference being the initial pressure setting and the degree of inflation of the air spring when the cycle initiates. The programmable controller provides for a variety of therapy modes that are easily adjusted without changes to the structure of the stander.

2.2.4 Electrical Circuitry

The electrical circuit design required careful consideration of the environment and the patient population. Though one should always design circuitry with absolute safety in mind, this situation called for extra care. The patient population that this device is configured for frequently have cognitive and communication problems. They may not understand or be able to communicate to someone that they are feeling an energy source that is harmful. They also do not have enough motor control to remove themselves from the device or even stop it in the case of a problem. It is for these reasons that all electrical circuitry, motors, and switches with the exception of the load cells were removed from the base frame. Placing these devices on a separate device isolates the most at risk and lest able to help themselves person in the room from electrical danger. The load cells are unavoidably located on the frame but they deliver and receive such a low amount of current and voltage along with being physically isolated from the patient by insulating materials, that the risk is as mitigated as possible.

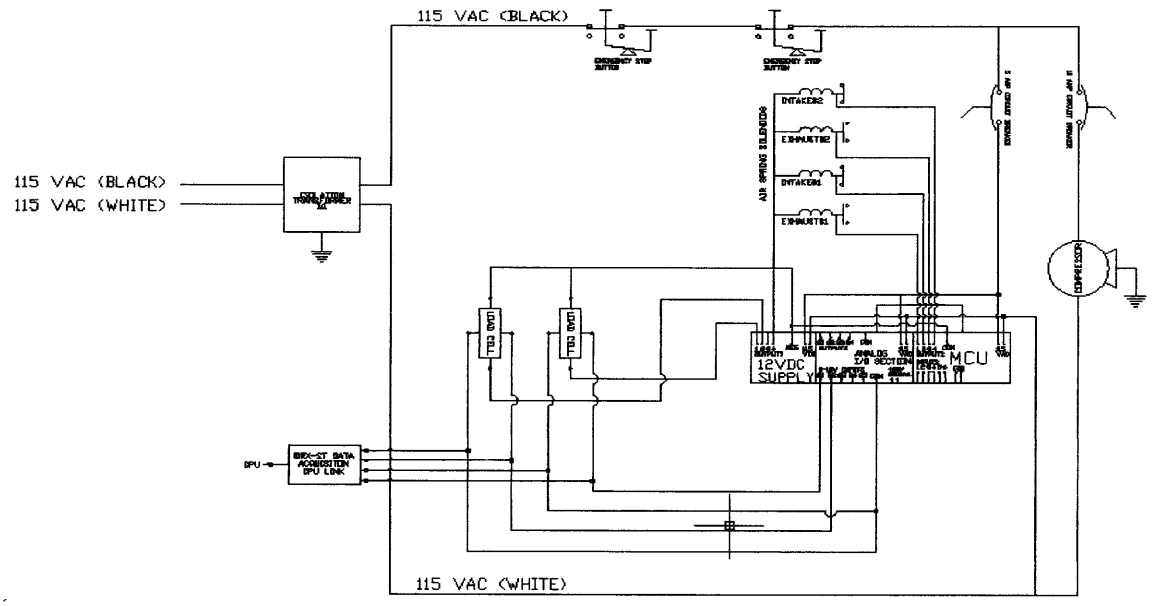

Figure 2.3 Wiring Schematic.

The device is configured to use household 120V/60 cycle single phase electricity. There is a possibility that the device could be used in the home and therefore the lower amperages required by higher supply voltage or multiple phases did not outweigh the convenience of using the most commonly found supply voltage in the U.S.

The power cord that feeds that main power to the enclosure has a restart prevention circuit. This consists of a breaker which trips when power is removed and must be manually reset when power is restored. This power cord feeds into a 1:1 isolation transformer that removes any physical connection of the device circuitry and the building power. This serves as a safeguard against power surges that can damage personnel and/or equipment. The 120VAC current flows through circuit breakers to the compressor circuitry which is located within the sound enclosure and to the 12VDC power supply module and main control module. The solenoids for the pneumatic valves receive their electricity from normally open contactors found on the control module that have jumpers bringing them 120VAC from the supply to the controller.

The 12VDC power supply receives 120VAC and converts it to a DC load for the load cell supply lines. This is the only electrical energy supplied to the standing frame proper and the closest source of electrical energy that the subject is exposed to.

The whole of the pneumatic and electrical circuit is located within an EMI shielded electrical enclosure that is located on the adjacent equipment cart. The EMI shielding will minimize any radiation from the device that could influence or damage surrounding equipment and is a very important consideration for use in a clinical setting. The EMI shielding also protects the control circuitry from outside influences.

The device is equipped with two large red colored emergency shut off switches. These switches are wired in series and serve to power down the device in case of mishap or emergency.

The only physical connections between the enclosure and the stander are the leads for the load cells which are low voltage/amperage and the tubing for the air springs which are plastic and therefore electrically isolating.

The pick ups for the digital signal converter and processor are accomplished within the enclosure and again present no risk to the patient.

2.2.5 Fabrication

The fabrication techniques for the stander consist of basic machining and welding activities. The only significant operation is the fabrication of the gull wing cross members. The radiuses involved and the limited amount of height that was designed into the gull wings has removed the possibility of economically bending them out of a continuous piece of tubing. This was an oversight on the part of the designer in not accommodating the required clamping distance of the bending machines into the overall height of the gull wings. The standard powered tubing devices require a three to six inch tangent section at either end of a bend in order to allow the clamps that fix the tubing in the machine sufficient purchase to accomplish the operation. Sections of tubing will have to be bent with the required tangents available for the clamps. These tangents will then be cutoff and two 90deg bends can be welded together in order to form either side of the gull wing. The wall thickness for the tubing is approximately 1/8". This is rather thick and was not required structurally but will facilitate welding by providing plenty of

material to work with. The added weight at the bottom of the device also provides a stabilizing force in order to prevent the possibility of a tip over. The central keel rectangular tubes are welded to the center section of the gull wings. These tubes are also 1/8' thick, again more for ease of welding and low center of gravity than any structural considerations.

The construction of the base frame, with the exception of the wheels, is accomplished by welding. The frame can be constructed square and plumb without reliance on fixtures. This was done due to the prototype nature of the stander. If the call came for large numbers of these frames to be built in a short period of time, a simple fixture could be created to assist in rapid production of the frames.

The supine support framework is also welded from steel tubing though it is 2"x1" rectangular in cross section. This lighter weight material, in combination with the stiffness provided by the delrin board, will provide sufficient support with a comfortable margin of safety.

The delrin board is dimensioned comparably with other currently marketed supine standers. The dimensions are intended to accommodate a child of up to 100lbs and up to 54" of height. The slots in the board are designed to accommodate standard available trunk and head supports and restraint straps. The position and number of slots are intended to allow a broad range of adjustment allowing secure support for a wide variety of body types and control needs. The board is bolted to the pivoting support frame but the bolts do not come in contact with the subject while positioned on the board. Dimensions for the above mentioned components are ruler dimensions with a tolerance of 1/16" plus or minus.

The foot rests and actuator assembly involve the most intense fabrication techniques with the tightest tolerances. The alignment of the linear shafts that serve to remove lateral play from the assembly is a critical feature. If the shafts are not square, and in close alignment to the linear bearings, there will be binding in the assembly. This binding will manifest a certain degree of hysteresis and can throw off the load wave readings. The ramp up and release curve of the loading will be steepened or possibly drop of vertically due to the binding. Special care must be taken to maintain the alignment. One possible method of maintaining this alignment is to fix the two bottom and top plates of the foot rests to the base plate of the actuator assembly in a stack. Pilot holes are drilled through all three levels of the stack while they are fitted to the table of a vertical milling machine. A piece of sacrificial scrap delrin can be placed under the stack to prevent binding of the drill bit as it penetrates the bottom aluminum plate and maintain a fairly perpendicular arrangement with regard to the axis of the arbor in the mill head. Continue opening the hole until it is possible to utilize a two fluted end mill to plunge the hole into the plates. This end mill must be smaller than the required diameter for the tap that will cut the threads for the end threaded linear shaft. The two fluted end mill is much stiffer than an equivalent diameter drill bit yet still able to plunge a hole through the material. The key will be too compensate the quill feed speed to the changing material as one penetrates each level.

Once the holes for the linear shafts have been placed through the plates the mounting holes for the linear bearing blocks can be drilled through the stack. The holes for these mounts should be clearance holes that are roughly 1/32" larger in diameter than the corresponding bolts. This extra width along with the angularity permissible by the

linear bearing will be enough compensation for any lack of square and plumb in the linear shafts.

Once these critical mounting holes are complete the stack can either be taken apart or the mounting slots for the foot wedge sandals can be machined into the top foot rest plate. These slots allow lateral alignment of the foot wedges. The foot wedges are currently used on other marketed standers and compensate for the natural position of the foot with regard to the lower leg. The spasticity found in cerebral palsy patients can cause "toe walking" which is characterized by the weight being focused on the toes rather than balanced across the base of the foot when the child is standing.[31] These wedges allow some adjustment with regard to foot angle and have built-in straps to secure the foot in position. Ideally the sandal should be centered over the actuator but the liner bearings can compensate for side loading if the child's comfort requires some offset.

The mounting holes for the shaft supports that hold up the pivot shaft and the screw jack binding support should also be clearance holes. The extra diameter allows for an adequate amount of play to facilitate alignment of the mounting points through the shaft supports and bearings.

The remaining fabrication operations are fairly straightforward, consisting of basic drilling, cutting, and fitting procedures. The design was intended to be simple and economical while still maintaining full functionality and structural integrity.

CHAPTER 3

CALIBRATION ACTIVITIES

3.1 Calibration of the Load Cell

The calibration of the load cells is of the utmost importance. This not only guarantees accuracy of the trial and treatment but also maintains the safety of the subject. Sudden accelerations or overloading of the subject can cause impact loading. The brief time constant of an intact load can magnify the effect of the force and cause significant injury in patients that already have compromised bone structure.

The first step in the calibration process should be to ensure that the V_{in} legs running from the 12VDC power module to the load cells is accurate and in fact constant. The next step is to obtain a series of masses that are weighed and verified in order to generate a calibration curve for the cells and the pressure requirements of the system. Subjects of different weights will require a different maximum pressure setting at the mechanical regulator. This maximum setting should be no more than the actual live weight of the subject which would be equivalent to the 1g load the subject would experience while standing.

The calibration of the load cells is as follows:

1. Activate the electrical circuit by resetting the breaker on the power cord.
2. Open enclosure and energize the control circuit breaker. It is not necessary to energize the compressor circuit at this time.
3. Using a meter, read the voltage across the breaker and across the input terminals to the main control unit and the 12VDC power supply. Values should be 120VAC.
4. Read across the output terminals of the 12VDC power supply and ensure a reading of 12VDC.
5. Take baseline reading of the V_{out} lines of the load cell. These readings should be taken with the top plate of the foot rests removed. Note reading.

6. Install top plate of the foot rest on the assembly and note the difference in this reading from the one taken without the top plate installed. This will serve as the tare of the scale. Note that the top plate should have the foot sandals installed on the top plate.
7. You now will place the weights in increments of five pounds onto the foot sandal. Take readings of the V_{out} at each step. The smaller the increments are the better resolution that will be generated. The weights should be removed from the sandal between measurements. The trial should be repeated three times and an average of the V_{out} readings should be used for the curve.
8. Plot the V_{out} vs. weight. This establishes the calibration.

3.2 Calibration of the Pneumatic Circuit

The next calibration to complete is that of the mechanical regulator and the air springs. This can be done on one air bag circuit but results should be validated for both circuits. This procedure will require powering up the compressor. Opening and closing of the valves can be accomplished by writing a brief program in the controller that will keep the valves in a specific condition for a period of time. The other option is to disconnect the valve solenoids from the controller and connect the exhaust valve solenoid directly to the 120VAC line through a switch. The intake solenoid will be connected in a similar fashion. The switches will allow the activation of the valves as necessary to calibrate the pressures for the air bags.

Calibration is as follows:

1. Engage the power reset breaker on the power cord.
2. Engage the breakers for the compressor and the control circuit.
3. Set the compressor max value for 125psi and allow the tank to fill.
4. Energize the exhaust valve in order to prepare the circuit.
5. Set the mechanical regulator at 10 psi.
6. Once tank is full, energize the intake solenoid while maintaining current to the exhaust solenoid. This will allow the air spring to fill. Allow filling to continue until air bag is completely full. Measure height of air bag.
7. Place weights from load cell calibration onto the foot sandal until there is an appreciable decrease in air bag height.

8. Increase mechanical regulator setting until air bag just returns to full height. It is important to be very diligent in observing the increase of the bag height and recording the exact setting of the regulator when full height is re-established. It would be prudent to wait for 30 sec after increasing the regulator setting to allow the system to stabilize.
9. Increment weight by 5lbs and remove the weight between trials. Repeat three times and take average for curve. Plot PSI vs. weight.

This calibration strategy will demonstrate what the maximum pressure setting should be based on the subject's weight and the operational mode of the therapy. The above mentioned strategy will work for the restrained leg/zero displacement operational mode.

3.3 Calibration and Programming of Digital Recording and Trigger Values

The calibration of the digital signal recording can be accomplished during the calibration of the load cell. Relate the calibration curve to the digital input and the recording of the load curves will be provided.

Calibration of the load cells also provides the basis for the trigger values that are placed in the code of the controller. A typical control algorithm for the restrained leg/zero displacement mode is as follows:

1. Set exhaust valve 1 solenoid contacts open.
2. Set intake valve 1 solenoid contacts open.
3. Set exhaust valve 2 solenoid contacts open.
4. Set intake valve 2 solenoid contacts open.
5. Increment counter.
6. Goto last step when counter hits set point.
7. Close exhaust valve 1 solenoid contacts.
8. Close exhaust valve 2 solenoid contacts.
9. Close intake valve 1 solenoid contacts.
10. Read load cell one. (Set Sampling Rate in Program)
11. Set intake valve 1 solenoid contacts open when Load Cell One = Load Cell One setpoint.
12. Wait 1 sec.
13. Set exhaust valve 1 solenoid contacts open.
14. Close intake valve 2 solenoid contacts.

15. Read load cell two. (Set Sampling Rate in Program)
16. Set intake valve 2 solenoid contacts open when Load Cell Two = Load Cell Two setpoint.
17. Wait 1 sec.
18. Set exhaust valve 2 solenoid contacts open.
19. Return to step five.
20. End-Power Down.

This is a basic example of an algorithm that can be used. The operational mode is that of the legs in a fixed position with the actuators not displacing. This mode provides a steady increasing load to a set point without requiring the movement of the legs. Subjects that have excessive spasticity resulting in an inability to cycle their legs up and down may be candidates for this mode. A displacement mode is also possible through the use of a position sensor that would switch the valves when the foot pads hit the top of their stroke. The device and control circuit provide flexibility for different approaches.

CHAPTER 4

VALIDATION STRATEGIES

The validation strategy for this device should establish the proper function of the device and its associated safety features before any human is placed in the device. The protocol can be divided into three sections that will be called:

- IQ- Installation Qualification
- OQ- Operational Qualification
- PQ- Performance Qualification

These three steps will validate the function and performance of the device and establish its compliance with the design input statements that govern the requirements of its function.

The IQ will test the function of all the circuits and actuators that make up the device. Function of each component and especially the safety devices must be proven. This is critical prior to progressing any further with the validation. The initial condition of the device is disconnected from power with the compressor tank empty and all breakers in the tripped position.

The validation checklist is as follows:

1. Review installation and ensure that all bolts have appropriate torque.
2. Review wire connections and ensure that they match the wiring schematic and are secure. Pay close attention to all ground connections
3. Review pneumatic connections and ensure that they match the pneumatic schematic.
4. Confirm continuity of ground connections all the way to the plug of the power cord.
5. Plug the power cord into the wall. Use a meter to confirm that there is no current at the line side of the isolation transformer.

6. Reset the power interrupt breaker in the power cord and confirm presence of current on line and circuit side of isolation transformer. Confirm that there is no current across the compressor and control circuit breakers.
7. Reset compressor breaker and ensure current across breaker. Trip breaker and ensure that no current is present across the breaker in the tripped condition. Reset the breaker.
8. Repeat previous step for the control circuit breaker.
9. Verify compressor regulator setting and activate the compressor. Monitor that compressor cycles off when set point pressure is achieved. Bleed off air until the low set point is reached and confirm that compressor cycles back on. Repeat three cycles of this step.
10. Close safety regulator completely and verify that no pressure flows through regulator. Use a separate pressure gage to verify the reading on the regulator gage.
11. Verify proper line voltage at each input terminal of each module of programmable controller.
12. Verify that open contacts are open on the control module and that the valve solenoids are not energized.
13. Verify that 12VDC module has a 12VDC output.
14. Using jumpers verify that solenoid valves actuate on command.
15. Verify that E-Stop switches power down device. Note that the exhaust valves of both circuits should immediately open and depressurize system.
16. Verify that digital load data is recorded by PC. Use calibration weights to verify accuracy.

This completes the IQ portion of the validation. Record results and maintain on file with the individual device.

The OQ will require running the device through a standard algorithm trial. This will be a full simulation of the conditions that the device will experience during a therapy session. Control will be exercised by the controller and data recording function is to be verified. The OQ serves as the shakedown trial to ensure that the device can perform all required functions. It is this portion of the validation that will reveal any failures or bugs present in the design and control algorithm. Any failures must be documented for future reference. Any failure will require analysis of the root cause of the failure, repair or reprogramming as necessary, and a repeat of the full OQ protocol. There are no shortcuts

in any part of the validation. A well executed OQ can be the difference between a well functioning device and a large expensive paperweight.

Upon successful completion of the OQ trial one enters the PQ portion of the validation. It is here that one establishes repeatability of the device's process. Full therapy sessions are repeated for a minimum of three full cycles. Any failure at any point in the PQ requires analysis of root cause, repair/redesign, and a repeat of the full validation protocol. Document the results of the PQ and maintain on file for the device.

The preceding validation is a necessary part of the proper testing and documentation of any medical device. Well executed, the validation will assist in perfecting the device and ensuring safe interaction with the patients it has been designed to serve.

CHAPTER 5

CONCLUSION

The preceding document describes the sum of one year of work that this engineer has conducted in the field of dynamic standing therapy for patients suffering prolonged immobility and the design of a device that can provide a non-pharmacological option for therapy.

The concept for this device was inspired by the work done on standing therapy regimens by people in different parts of the world, of different cultures, but with a common goal: improving the quality of life for patients suffering from skeletal disorders resulting from very difficult and painful pathologies. The other commonality is in the desire to research and devise treatment strategies that do not rely on prescribing medicines to a population that is often already burdened by dependence on a large number of drugs.

The particular focus of the current configuration on cerebral palsy patients presents some interesting possibilities for this mode of therapy. This population can have difficulty with some of the standard treatment strategies for disuse based osteoporosis. Cerebral palsy patients are also subjected to this disorder during the most productive and critical years of bone development. There is a great opportunity to see significant results in this type of therapy. Stimulus of osteogenesis at this critical stage can improve the reservoir of bone tissue for these patients which will hopefully be with them throughout their lives. A reduction of non-traumatic fractures and slowing or even reversing the downward spiral of disuse osteoporosis can contribute a significant improvement of the quality of life and reduction of pain for this patient population.

APPENDIX: DRAWINGS & SCHEMATICS

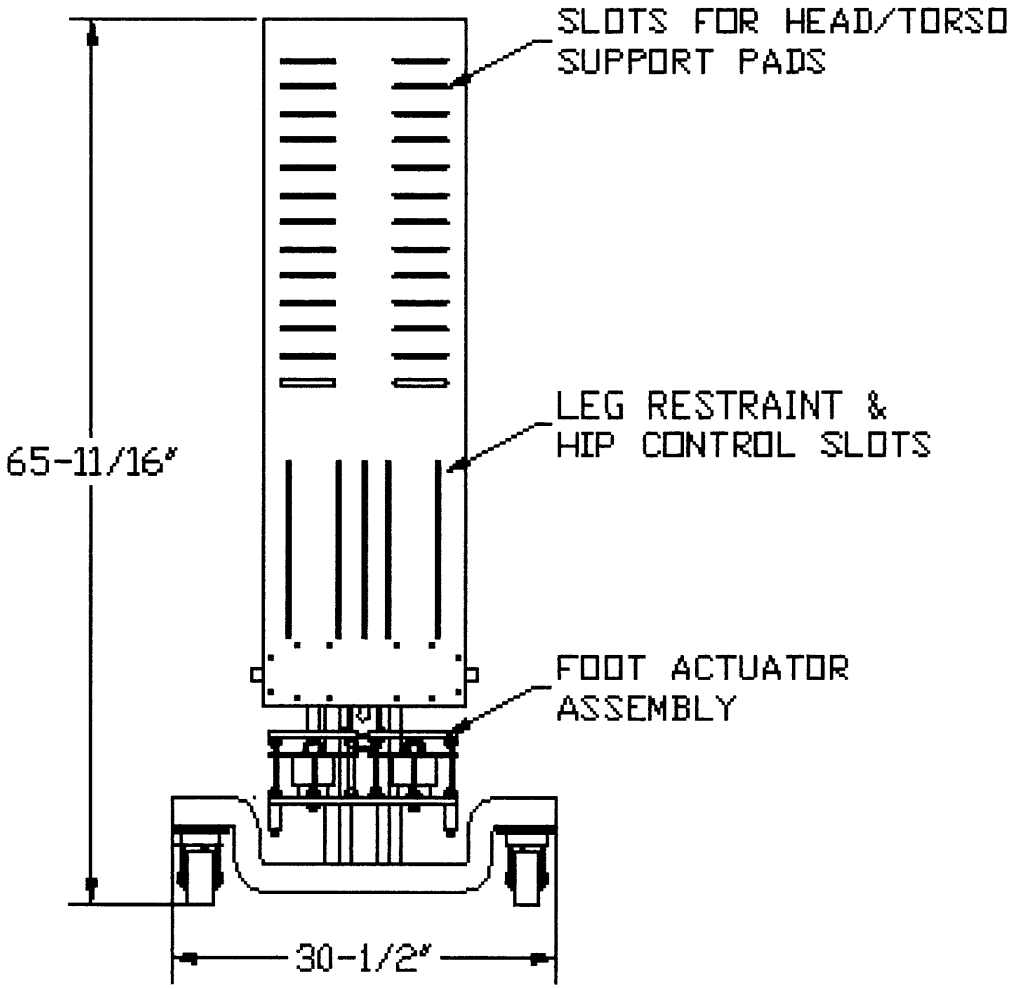

DYNAMIC SUPINE STANDER			
SIZE A	DRAWN BY LAE	DWG NO. 100.01	REV. 1
SCALE N.T.S.		SHEET 1 OF 4	

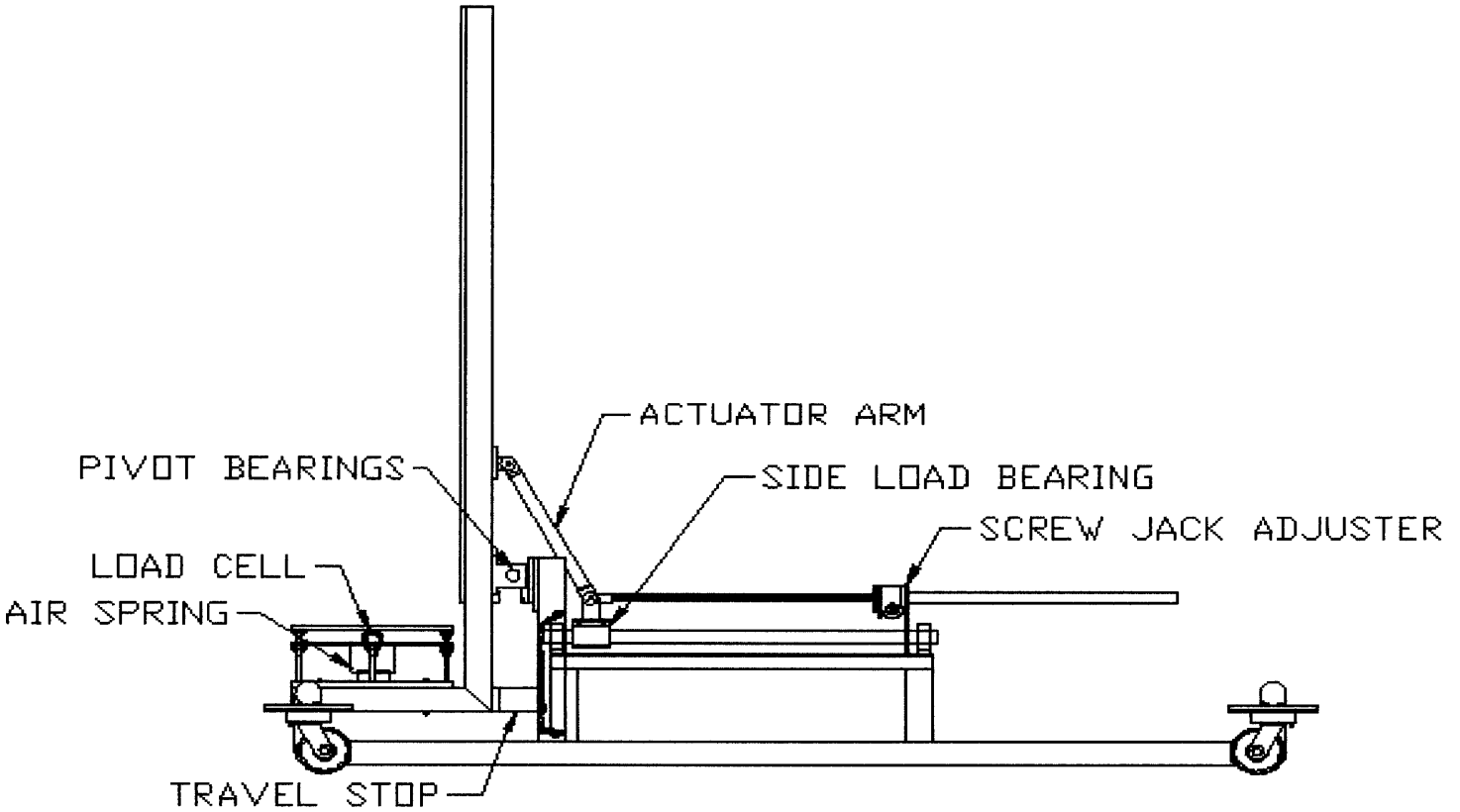

DYNAMIC SUPINE STANDER:
FRONT ELEVATION-VERTICAL POSITION

SIZE	DRAFTED BY:	DWG NO.	REV.
A	L.A.E	100.02	1
SCALE: N.T.S.		SHEET: 2 OF 4	

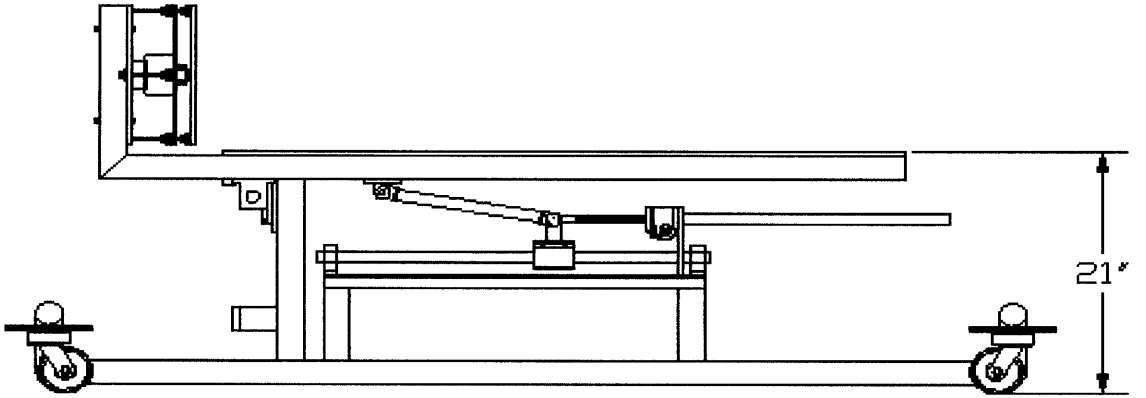

DYNAMIC SUPINE STANDER:
FRONT ELEVATION-HORIZONTAL POSITION

SIZE	DRAFTED BY:	DWG. NO.	REV.
A	L.AE	100.03	1
SCALE: N.T.S.		SHEET: 3 OF 4	

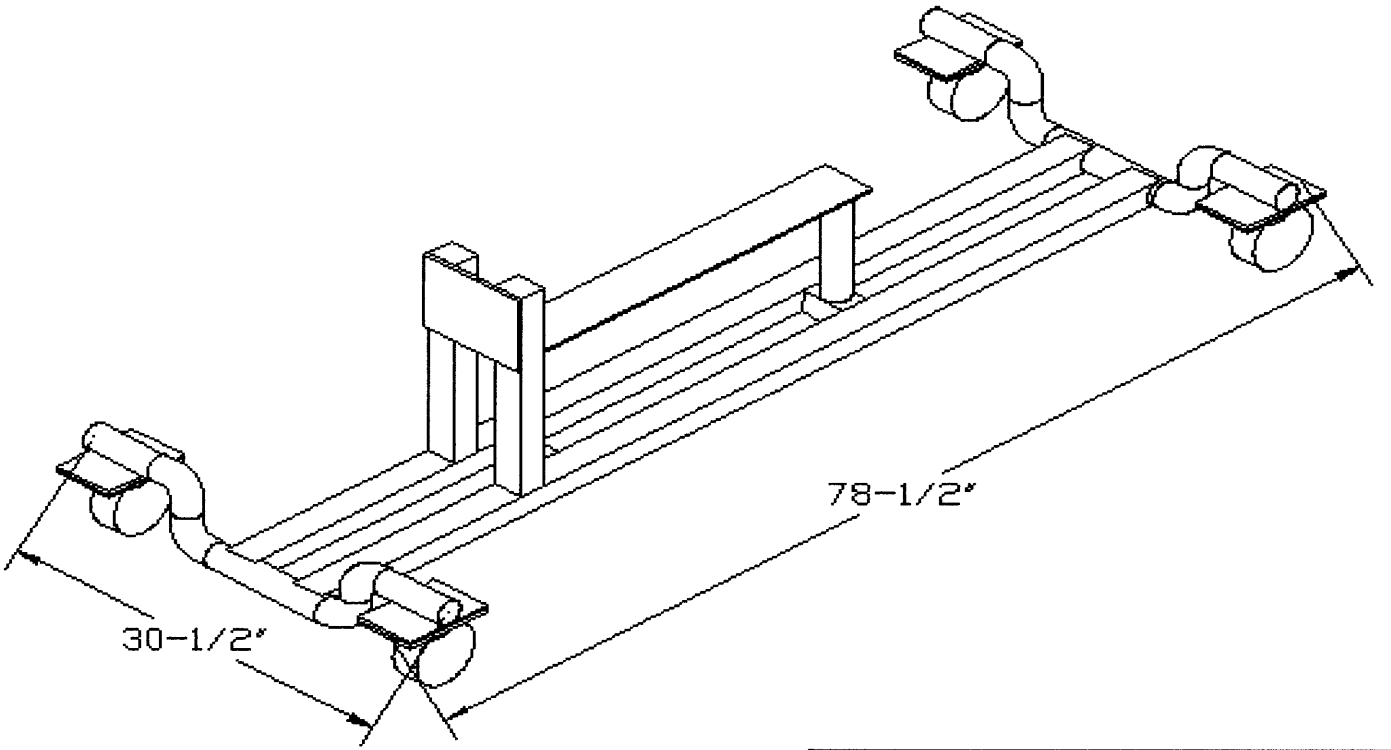

DYNAMIC SUPINE STANDER:
ISOMETRIC VIEW OF BASE FRAME

SIZE	DRAFTED BY:	DWG. NO.	REV.
A	LAE	100.04	1
SCALE N.T.S.		SHEET: 4 OF 4	

Pneumatics

Supply pressure	125 psi
Valve input	0-35 psi
Dia. Of Spring	3.6 in
Stroke	0.5 in
Vol.(1) Spring/cycle	5.09 in^3
CFM for both springs	0.353 CFM@1 atm

Line Pressure	5	10	15	20	25	30
CFM	0.471	0.588	0.706	0.824	0.941	1.059

Weights

Base Frame	130 lbs.
Patient Support	70 lbs.
Actuator Assembly	50 lbs.

Power Requirement 120 VAC/60/15amps

Max. Subject Weight 100 lbs.

Max. Subject Height 60 in.

Max. Frame Width 30.5 in

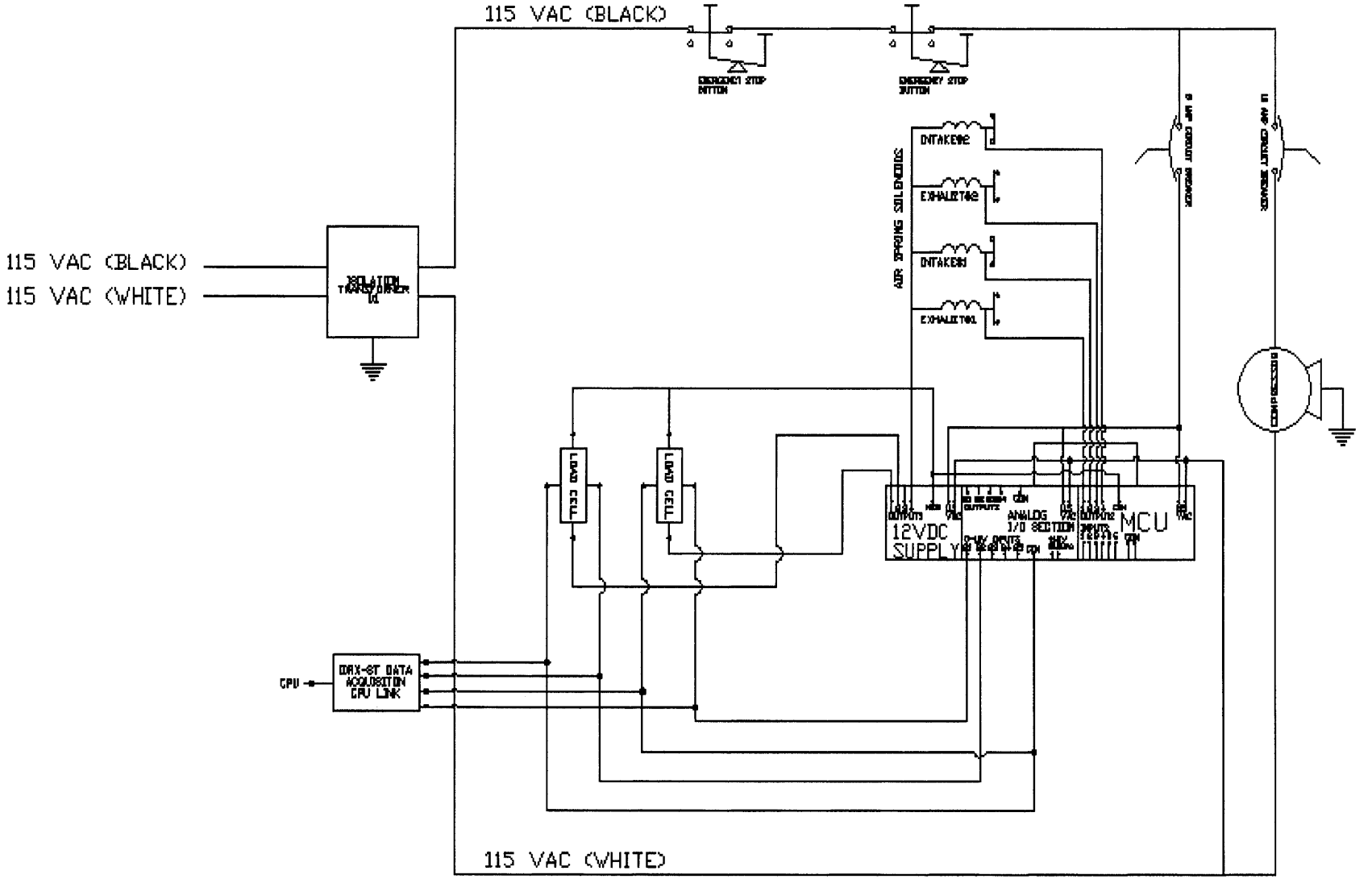
115 VAC (BLACK)
115 VAC (WHITE)
ISOLATION TRANSFORMER
115 VAC (BLACK)
EMERGENCY STOP BUTTON
EMERGENCY STOP BUTTON
AIR SPRING SOLENOIDS
INTAKE#2
EXHALE#2
INTAKE#1
EXHALE#1
LOAD CELL
LOAD CELL
12VDC SUPPLY
ANALOG I/O SECTION
MCU
CPU
DRX-ST DATA ACQUISITION CPU LINK
115 VAC (WHITE)

REFERENCES

1. Stuberg, W.A. (1992). Considerations related to weight bearing programs in children with developmental disabilities. *Physical Therapy, 72*, 35-40. Retrieved April 25, 2006, from http://www.ptjournal.org/cgi/reprint/72/1/35?maxtoshow=&HITS=10&hits=10&RESULTFORMAT=1&author1=stuberg&andorexacttitle=and&andorexacttitleabs=and&andorexactfulltext=and&searchid=1&FIRSTINDEX=0&sortspec=relevance&resourcetype=HWCIT database.

2. *Stedmans Medical Dictionary* (27th Edition). (2000). Baltimore, Maryland: Lippincott Williams & Williams.

3. Davies, J.H., Evans, B.A.J., Gregory, J.W., (2005). Bone mass acquisition in healthy children. *Archives of Disease in Children, 90,*373-378. Retrieved April 25, 2006, from http://adc.bmj.com/cgi/reprint/90/4/373?maxtoshow=&HITS=10&hits=10&RESULTFORMAT=&author1=davies+jh&andorexactfulltext=and&searchid=1&FIRSTINDEX=0&sortspec=relevance&resourcetype=HWCIT database.

4. Specker, B.L., Beck A., Kalkwark, H., Ho, M., (1997). Randomized trial of varying mineral intake on total body bone mineral accretion during first year of life. *Pediatrics, 99*, 12-. Retrieved February 25, 2006, from http://www.pediatrics.org/cgi/content/full/99/6/e12.

5. Henderson, R.C., Lark, R.K., Gurka, M.J., Worley, G., Fung, E.B., Conaway, M., Stallings, V.A., Stevenson, R.D., (2002). Bone density and metabolism in children and adolescents with moderate to severe cerebral palsy. *Pediatrics, 110*, 5-. Retrieved February 11, 2006, from http://www.pediatrics.org/cgi/content/full/110/1/e5.

6. Schoenau, E., Rauch, F., (2002). Skeletal development in premature infants: A review of bone physiology beyond nutritional aspects. *Archives of Disease in Children Fetal Neonatal Edition, 86,* 82-85. Retrieved April 25, 2006, from http://fn.bmj.com/cgi/reprint/86/2/F82?maxtoshow=&HITS=10&hits=10&RESULTFORMAT=&author1=schoenau&andorexactfulltext=and&searchid=1&FIRSTINDEX=0&sortspec=relevance&resourcetype=HWCIT database.

7. Frost, H.M., (2003). Bone's Mechanostat: A 2003 Update. *The Anatomical Record Part A, 275A*, 1081-1101 Retrieved November 29, 2006, from http://www3.interscience.wiley.com/cgi-bin/fulltext/106562125/PDFSTART .

8. Ward, K.A., Caulton, J.M., Adams, J.E., Mughal, M.Z., (2006). Perspective: Cerebral palsy as a model of bone development in the absence of postnatal mechanical factors. *Journal of Musculoskeletal Neuronal Interactions, 6(2)*, 154-159. Retrieved November 29, 2006, from http://www.ismni.org/jmni/pdf/24/09WARD.pdf .

9. Skerry, T.M., (2006). One Mechanostat or many? Modifications of the site-specific response of bone to mechanical loading by nature and nuture. *Journal of Musculoskeletal Neuronal Interactions, 6(2)*, 122-127. Retrieved November 29, 2006, from http://www.ismni.org/jmni/pdf/24/04SKERRY.pdf .

10. Rauch, F., (2006). Material matters: A mechanostat-based perspective on bone development in osteogenesis imperfecta and hypophosphatemic rickets. *Journal of Musculoskeletal Neuronal Interactions, 6(2)*, 142-146. November 29, 2006, from http://www.ismni.org/jmni/pdf/24/07RAUCH.pdf .

11. Gasser, J.A., (2006). Coupled or uncoupled remodeling, is that the question?. *Journal of Musculoskeletal Neuronal Interactions, 6(2)*, 128-133. Retrieved February 11, 2006, from http://www.ismni.org/jmni/pdf/24/05GASSER.pdf .

12. Rittwetger, J., (2006). Can exercise prevent osteoporosis?. *Journal of Musculoskeletal Neuronal Interactions, 6(2)*, 162-166. Retrieved February 11, 2006, from http://www.ismni.org/jmni/pdf/24/11RITTWETGER.pdf .

13. Ward, K., Alsop, C., Caulton, J., Rubin, C., Adams, J., Mughal, Z., (2004). Low magnitude mechanical loading is osteogenic in children with disabling conditions. *Journal of Bone and Mineral Research, 19(3)*, 360-369. Retrieved November 29, 2006, from http://www.jbmronline.org/doi/pdf/10.1359/JBMR.040129 .

14. Henderson, R.C., Kairalla, J., Abbas, A., Stevenson, R.D., (2004). Predicting low bone density in children and young adults with quadriplegic cerebral palsy. *Developmental Medicine & Child Neurology, 46*, 416-419. Retrieved November 29, 2006, from http://journals.cambridge.org/download.php?file=%2FDMC%2FDMC46_06%2FS0012162204000672a.pdf&code=a1224acba9579346e332fec41a70bb64

15. Gass, M., Dawson-Hughes, B., (2006). Preventing Osteoporosis-Related Fractures: An overview. *The American Journal of Medicine, 119(4A)*, 3S-11S. Retrieved November 29, 2006, from http://www.sciencedirect.com/science?_ob=ArticleURL&_udi=B6TDC-4JJFP7N-2&_user=687439&_coverDate=04%2F30%2F2006&_alid=498427992&_rdoc=1&_fmt=full&_orig=search&_cdi=5195&_sort=d&_docanchor=&view=c&_acct=C000038299&_version=1&_urlVersion=0&_userid=687439&md5=732584733025da9370320ba0da9959f3

16. Bonnick, S.L., Shulman, L.., (2006). Monitoring osteoporosis therapy: Bone mineral density, bone turnover markers, or both?. *The American Journal of Medicine, 119(4A)*, 25S-31S. Retrieved November 29, 2006, from http://www.sciencedirect.com/science?_ob=ArticleURL&_udi=B6TDC-4JJFP7N-5&_user=687439&_coverDate=04%2F30%2F2006&_alid=498429722&_rdoc=1&_fmt=full&_orig=search&_cdi=5195&_sort=d&_docanchor=&view=c&_acct=C000038299&_version=1&_urlVersion=0&_userid=687439&md5=cf7065136a349711814d43e525a56590 database.

17. Horlick, M., Wang, J., Pierson, R.N., Thornton, J.C., (2004). Prediction models for evaluation of total-body bone mass with dual-energy X-ray absorptiometry among children and adolescents. *Pediatrics, 114*, 337-345. Retrieved February 25, 2006, from http://www.pediatrics.org/cgi/content/full/114/3/e337 database.

18. Cummings, S.R., Bates, D., Black, D.M., (2002). Clinical use of bone densitometry. *The American Journal of Medicine, 288(15*, 1889-1897. Retrieved November 29, 2006, from http://jama.ama-assn.org/cgi/search?fulltext=clinical+use+of+bone+densitometry database.

19. Fewtrell, M.S., (2003). Bone densitometry in children assessed by dual x ray absorptiometry: uses and pitfalls. *Archives of Disease in Children, 88,* 795-798. Retrieved April 25, 2006, from http://adc.bmj.com/cgi/reprint/88/9/795?maxtoshow=&HITS=10&hits=10&RESULTFORMAT=&author1=fewtrell&andorexactfulltext=and&searchid=1&FIRSTINDEX=0&sortspec=relevance&resourcetype=HWCIT database.

20. Schoenau, E., (2005). From mechanostat theory to development of the "Functional Muscle-Bone-Unit". *Journal of Musculoskeletal Neuronal Interactions, 5(3)*, 232-238. Retrieved November 29, 2006, from http://ismni.org/jmni/pdf/21/07SCHOENAU.pdf database.

21. Munns, C.F.J., Cowell, C.T., (2005). Prevention and treatment of osteoporosis in chronically ill children. *Journal of Musculoskeletal Neuronal Interactions, 5(3)*, 262-272. Retrieved November 29, 2006, from http://ismni.org/jmni/pdf/21/10MUNNS.pdf database.

22. Caulton, J.M., Ward, K.A., Alsop, C.W., Dunn, G. Adams, J.E., Mughal, M.Z., (2004). A randomized controlled trial of standing programme on bone mineral density in non-ambulant children with cerebral palsy. *Archives of Disease in Children, 89,* 131-135. Retrieved February 11, 2006, from http://adc.bmj.com/cgi/reprint/89/2/131?maxtoshow=&HITS=10&hits=10&RESULTFORMAT=&author1=caulton&andorexactfulltext=and&searchid=1&FIRSTINDEX=0&sortspec=relevance&resourcetype=HWCIT database.

23. Morton, R.E., Hankinson, J., Nicholson, J., (2004) Botulinum toxin for cerebral palsy; where are we now?. *Archives of Disease in Children, 89,* 1133-1137. Retrieved April 25, 2006, from http://adc.bmj.com/cgi/reprint/89/12/1133?maxtoshow=&HITS=10&hits=10&RESULTFORMAT=&author1=morton+re&andorexactfulltext=and&searchid=1&FIRSTINDEX=0&sortspec=relevance&resourcetype=HWCIT database.

24. Scrutton, D., Baird, G., (1997) Surveillance measures of the hips of children with bilateral cerebral palsy. *Archives of Disease in Children, 76,* 381-384. Retrieved April 25, 2006, from http://adc.bmj.com/cgi/reprint/76/4/381?maxtoshow=&HITS=10&hits=10&RESULTFORMAT=&author1=scrutton&andorexactfulltext=and&searchid=1&FIRSTINDEX=0&sortspec=relevance&resourcetype=HWCIT database.

25. Baird, G., McConachie, H., Scrutton, D., (2000) Parents' perceptions of disclosure of the diagnosis of cerebral palsy. *Archives of Disease in Children, 83,* 475-480. Retrieved April 25, 2006, from http://adc.bmj.com/cgi/reprint/83/6/475?maxtoshow=&HITS=10&hits=10&RESULTFORMAT=&author1=scrutton&andorexactfulltext=and&searchid=1&FIRSTINDEX=0&sortspec=relevance&resourcetype=HWCIT database.

26. Maudsley, G., Hutton, J.L., Pharoah, P.O.D., (1999) Cause of death in cerebral palsy: a descriptive study. *Archives of Disease in Children, 81,* 390-394. Retrieved April 25, 2006, from http://adc.bmj.com/cgi/reprint/81/5/390?maxtoshow=&HITS=10&hits=10&RESULTFORMAT=&author1=maudsley&andorexactfulltext=and&searchid=1&FIRSTINDEX=0&sortspec=relevance&resourcetype=HWCIT database.

27. Hutton, J.L., Pharoah, P.O.D., Rosenbloom, L., (2002) Effects of cognitive, motor, and sensory disabilities on survival in cerebral palsy. *Archives of Disease in Children, 86,* 84-89. Retrieved April 25, 2006, from http://adc.bmj.com/cgi/reprint/86/2/84?maxtoshow=&HITS=10&hits=10&RESULTFORMAT=&author1=hutton&andorexactfulltext=and&searchid=1&FIRSTINDEX=0&sortspec=relevance&resourcetype=HWCIT database.

28. Drapeau, M.S.M., Streeter, M.A., (2006). Modeling and remodeling responses to normal loading in the human lower limb. *American Journal of Physical Anthropology, 129*, 403-409. Retrieved November 29, 2006, from http://www3.interscience.wiley.com/cgi-bin/fulltext/112169254/PDFSTART .

29. Frey Law, L.A., Shields, R.K., (2004). Femoral loads during passive, active, and active-resistive stance after spinal cord injury: a mathematical model. *Clinical Biomechanics, 19*, 313-321. Retrieved November 29, 2006, from http://www.sciencedirect.com/science?_ob=ArticleListURL&_method=list&_ArticleListID=498483822&_sort=d&view=c&_acct=C000038299&_version=1&_urlVersion=0&_userid=687439&md5=02251a146289c9af6774001d8da583e9 database.

30. Taub, E., Landesman Ramey, S., DeLuca, S., Echols, K., (2004). Efficacy of constraint-induced movement therapy for children with cerebral palsy with asymmetric motor impairment. *Pediatrics, 113*, 305-312. Retrieved March 27, 2006, from http://www.pediatrics.org/cgi/content/full/113/2/305 database.

31. Krigger, K.W., (2006). Cerebral palsy: An overview. *American Family Physician, 73(1)*, 91-100. Retrieved March 27, 2006, from http://www.aafp.org/afp/20060101/91.pdf database.

32. Oeffinger, D.J., Tylkowski, C.M., Rayens, M.K., Davis, R.F., Gorton, G.E., D'Astous, J., Nicholson, D.E., Damiano, D.L., Abel, M.F., Bagley, A.M., Luan, J., (2004). Gross motor function classification system an outcome tools for assessing ambulatory cerebral palsy: a multicenter study. *Developmental Medicine & Child Neurology, 46*, 311-319. Retrieved November 29, 2006, from http://journals.cambridge.org/download.php?file=%2FDMC%2FDMC46_05%2FS001216220400051 9a.pdf&code=16faddac624bc1029a01ec5fab104dcd database.

33. Gudjonsdottir, B., Stemmons Mercer, V., (2002). Effects of a dynamic versus a static prone stander on bone mineral density and behavior in four children with severe cerebral palsy. *Pediatric Physical Therapy, 14*, 38-46. Retrieved November 29, 2006, from http://www.pedpt.com/pt/re/pedpt/pdfhandler.00001577-200214010-00006.pdf;jsessionid=FnNbThRrpfmjJPJskQ57fJXnsLXPFn0bvGQc9kTFQ3QDd4pq1CXd!-1996709112!-949856145!8091!-1?index=1&database=ppvovft&results=1&count=10&searchid=1&nav=search database.

34. Gudjonsdottir, B., Stemmons Mercer, V., (2002). A motorized dynamic stander. *Pediatric Physical Therapy, 14*, 49-51. Retrieved November 29, 2006, from http://www.pedpt.com/pt/re/pedpt/pdfhandler.00001577-200214010-00008.pdf;jsessionid=FnNbThRrpfmjJPJskQ57fJXnsLXPFn0bvGQc9kTFQ3QDd4pq1CXd!-1996709112!-949856145!8091!-1?index=1&database=ppvovft&results=1&count=10&searchid=1&nav=search database.

35. Maimoun, L., Fattal, C., Micallef, J.P., Peruchon, E., Rabischong, P., (2006). Bone loss in spinal cord-injured patients: from physiopathology to therapy. *Spinal Cord, 44(4)*, 203-10. Retrieved November 29, 2006, from http://www.nature.com/sc/journal/v44/n4/pdf/3101832a.pdf database.

36. Tortora, G.J., Reynolds Grabowski, S. (1996). Chapter Six: Bone Tissue. In Tortora, Grabowski (Eighth Ed.) *Principles of Anatomy and Physiology* (pp142-161). New York: Harper Books.