PRESSURE SWING ABSORPTION-BASED SEPARATION OF A GAS MIXTURE

by
Syamalendu Bhaumik

A Thesis
Submitted to the Faculty of
New Jersey Institute of Technology
in Partial Fulfillment of the Requirements for the Degree of
Master of Science

Department of Chemical Engineering,
Chemistry, and Environmental Science

January, 1993

APPROVAL PAGE

Pressure Swing Absorption-based Separation of a Gas Mixture

Syamalendu Bhaumik

Dr. K. K. Sirkar, Thesis Adviser
Sponsored Chair, Membrane Separations and Biotechnology and
Professor of the Department of Chemical Engineering, Chemistry,
and Environmental Science, NJIT

Dr. Piero Armenante, Committee Member
Professor of the Department of Chemical Engineering, Chemistry,
and Environmental Science, NJIT

Dr. Henry Shaw, Committee Member
Professor of the Department of Chemical Engineering, Chemistry,
and Environmental Science, NJIT

Blank Page

BIOGRAPHICAL SKETCH

Author: Syamalendu Bhaumik

Degree: Master of Science in Chemical Engineering

Date: January, 1993

Undergraduate and Graduate Education:

- Master of Science in Chemical Engineering,
  New Jersey Institute of Technology, Newark, NJ, 1993

- Bachelor of Technology in Chemical Engineering,
  University of Calcutta, Calcutta, India, 1990

- Bachelor of Science in Chemistry,
  University of Calcutta, Calcutta, India, 1987

Major: Chemical Engineering

ABSTRACT

Pressure Swing Absorption-based Separation of a Gas Mixture

by
Syamalendu Bhaumik

In this study, separation of a gas mixture was investigated using the novel concept of pressure swing absorption in a stationary absorbent liquid. The best features of pressure swing adsorption, gas liquid scrubbing and hollow fiber based membrane processes were incorporated to develop the process.

A well-packed microporous hydrophobic hollow fiber module was used to achieve absorption of a gas at a high pressure into a liquid during a certain part of the cycle followed by desorption of the gas from the liquid in the other part of the cycle. The device has a very high interfacial area per unit volume since the gas-liquid interfaces are immobilized at the pore mouths of fine hollow fibers. Separation of mixtures of N_2 and CO_2, where CO_2 is the impurity to be removed, was studied using a simple absorbent liquid such as water. The results show that the process is feasible and quite efficient in reducing CO_2 concentration in the purified gas by using cycle times as low as 40 seconds. A preliminary model for one type of pressure swing absorption cycle has been formulated to provide, in future, a guideline for the cycle time.

ACKNOWLEDGMENT

I wish to express my sincere gratitude to my advisor, Professor K. K. Sirkar, for his guidance and moral support throughout this research.

Special thanks to Professors Piero Armenante and Henry Shaw for serving as members of the committee.

I am very much grateful to Dr. Majumdar for his constant help throughout this project. I am also grateful to Dr. Guha for his suggestions every now and then in every respect. Special thanks to all of my lab mates for their generous help, namely, Mr. Shanbhag, Mrs. Karoor, Mr. Cha. I must not forget to thank both the communities of Stevens Institute of Technology and New Jersey Institute of Technology.

Finally, the ultimate thank is due to my wife for her constant inspiration from the far place, Calcutta, India.

TABLE OF CONTENTS

LIST OF TABLES

LIST OF FIGURES

LIST OF NOTATIONS

C_{jg} : concentration of species j in the gas phase, mol/m^3

C_{jl} : concentration of species j in the liquid phase, mol/m^3

d_i : inside diameter of a hollow fiber, m

d_o : outside diameter of a hollow fiber, m

D_{jg} : diffusion coefficient of species j in the gas phase, m^2/s

D_{jl} : diffusion coefficient of species j in the liquid phase, m^2/s

H_j : solubility coefficient of gas species j in a liquid, $mol/(m^3.Pa)$

K_{jg} : gas transfer mass transfer coefficient of species j, m/s

l : effective fiber length in a module, m

P : pressure in the fiber lumen, Pa

r : radial distance, m

r_e : equivalent radius of free surface, m

r_i : inside radius of a hollow fiber, m

r_o : outside radius of a hollow fiber, m

R : universal gas constant, $(m^3.Pa)/(mol.^oK)$

t : time, s

T : temperature, ^oK

v_g : gas velocity in fiber lumen, m/s

z : longitudinal distance, m

Superscript

i : interface

Subscript

g : gas phase

j : component j

l : liquid phase

u : upstream section

CHAPTER 1

INTRODUCTION

Increasingly stringent air-emission regulations and the changing characteristics of gas reserves around the world, are prompting gas processors to try new technologies. Their goal is to separate both valuable components and the contaminants from the raw gas stream in the most economical, environmentally benign way.

Separation of gas mixtures in industry is achieved in a number of ways: absorption of gases in a reactive liquid, pressure swing adsorption (PSA) processes on a solid adsorbent, cryogenic processes, or selective permeation through a membrane etc. Each of these processes has some real advantages and disadvantages.

Separation of gas mixtures using absorption in a reactive liquid is generally carried out in a packed tower or a tray tower of which there are two, one for absorption and one for stripping; due to poor contacting efficiencies such a process involves costly and highly capital intensive giant contactors (Spilman, 1989; Qi and Cussler, 1985).

Pressure swing adsorption processes (Yang, 1987), are generally highly efficient for removing small impurities (Beaver and Bhat, 1989). The devices are generally bulky and become very costly when the concentration of impurity to be removed increases given the selectivities of the existing adsorbents. These

processes are sometimes slow since one cycle time for the process may be in the order of hour or hours; sometimes two to three days are required to reach cyclic steady state operation (Ritter and Yang, 1989). These processes also need two or four beds to reduce the time to reach steady state quickly due to longer single cycle time.

Membrane processes are appealing because they are very simple and economically attractive; they have low operating and capital costs. Membranes can be of any type e.g., solid polymeric (usually nonporous), microporous polymeric membrane or liquid membrane. Polymeric membranes are used for gas separations, but usually the selectivity and the separation factors are not high enough for most gases. The immobilized liquid membrane technique, first introduced by Ward and Robb (1967), was used to separate CO_2 and N_2 successfully. But it suffers from a number of drawbacks, the most important being the drying of liquid membrane from the pores via evaporation. To overcome this problem the new idea of hollow fiber contained liquid membrane technique (Guha et al. (1992)) was developed; this process was successfully used for the separation of CO_2/N_2 or CH_4/CO_2. However any such membrane process has difficulty in achieving extremely high levels of purification. Fortunately absorption processes do not have such shortcomings. That is why membrane based gas-liquid contactors have been developed recently.

Membrane-based gas-liquid contacting processes require two vessels, one

for absorption and the other for stripping. These are usually carried out in hollow fiber-based systems to provide very high interfacial area/volume. In countercurrent processes in such devices it has been observed that the shell-side liquid flow has considerable bypassing (Karoor, 1992; Yang and Cussler, 1986). This reduces separations considerably.

One way of eliminating all such deficiencies is to use a hollow fiber gas-liquid contactor in the manner of a pressure swing adsorber with the absorbent liquid being stationary on the shell-side and the gas flowing through the tube-side. The liquid on the shell-side replaces the traditional adsorbent particles in PSA. The feed gas is made to flow through the fiber bore during one part of the cycle when absorption occurs; during the rest of the cycle, no feed gas flows into the system, rather the absorbed gas is removed from the absorbent liquid by either pulling a vacuum or providing a purge gas. When such a cycle is of short duration, we can call such a process Rapid Pressure Swing Absorption or RAPSAB in short. The prime objective of this thesis is to explore how well such a concept works in practice.

The proposed system has many advantageous features:

- Since an extremely high surface area/volume (~ 100 cm^{-1}) can be packed in the device using hollow fine fibers (ID: 100 μm, OD: 150 μm), an extremely efficient contacting is achieved compared to any adsorber or absorber in current use.

- Extremely high purification capabilities of PSA processes or gas scrubbing processes are retained.
- The flooding-loading limitations of absorption towers are eliminated. Further the process can be applied to a gas stream at any pressure (as in a membrane process) by employing proper pressure control on the liquid phase vis-a-vis the immobilized gas-liquid interfaces at the hollow fiber pore mouths.
- Extraordinarily large inventory of liquid absorbents may be tapped for almost any separation desired.
- The absorption capacity of liquids, especially reactive ones, are significantly larger than most adsorbents (except in case of multilayer condensation of vapors).
- One vessel replaces two vessels, an absorber and a stripper used in conventional absorption processes just as in the membrane processes where the membrane absorbs at the feed interface and desorbs at the permeate interface.
- By using very short time cycles, the rate of absorption or desorption achieved are extremely high.

The proposed process has one serious drawback which is the evaporation of the scrubbing liquid during the operation. That means one cannot get a pure product from the column; if a pure product is needed, elimination of vapor of

scrubbing liquid carried with the product is needed.

In this thesis, the rapid pressure swing absorption separation was experimentally investigated using a N_2-CO_2 mixture, where CO_2 is the impurity to be removed, and water is the liquid absorbent. Such a system is simple with most transport coefficients and thermodynamic constants or properties being known. The ratio of solubility of CO_2 to that of N_2 in water at 25°C and 35°C are respectively 58.1 and 46.81 (Reid et al. (1987)). Thus water is highly selective for CO_2. Any evaporation of water from the shell-side can be automatically taken care of by connecting the shell-side of the hollow fiber device to a water reservoir at higher pressure. The absorbent conditions are invariant over as many cycles as necessary. The equilibrium constant for the CO_2 ionization reaction

$$CO_2 + H_2O \rightleftarrows HCO_3^- + H^+ \tag{1}$$

is so small (4.16×10^{-7} gm ion/liter at 20°C) that it can be neglected for pure water. Therefore, using such a system, it may be possible to compare the experimental results with any theoretical model of pressure swing absorption process to be developed.

A typical post-shift reactor synthesis gas mixture contains H_2, N_2, CO_2 and CO. By this process it is possible to remove both CO_2 and CO from the post-shift reactor synthesis gas and produce purified synthesis gas. The system of CO_2-N_2/water selected is further useful as a model for the synthesis gas

mixture. The solubility of H_2 in water is quite close to that of N_2 (e.g., Henry's law constants for H_2 and N_2 at 20°C are, for example, 6.83 x 10^4 and 8.04 x 10^4 in units of atm/mole fraction). Thus the behavior of the simple N_2-CO_2 system provides a basis for studying H_2-CO_2 and therefore N_2-H_2-CO_2 system. If the impurities CO and H_2S are ignored for the time being, the post-shift reactor synthesis gas is essentially a N_2-H_2-CO_2 mixture.

The first system to be studied should allow for unusual situations, leakages, mistakes, wastage and above all adjustments. A system with N_2-CO_2 and water is ideal in this respect. The pressure of the feed gas may vary from 10-100 psig.

The pressure swing absorption process with microporous hollow fibers is possible only because the gas-liquid interface is immobilized at every pore mouth (Figure 1) of the microporous membrane. The condition for such immobilized interface with hydrophobic membranes not wetted by the absorbent liquid is that the liquid pressure remain higher than that of the gas (Callahan, 1988). However, the liquid pressure should not exceed the gas pressure by an amount called the breakthrough pressure.

$$\Delta P_{cr} = \frac{2\gamma \, \mathrm{Cos}\theta}{r_{pore}} \qquad (2)$$

Here γ is the surface tension in the gas liquid system, θ is the contact angle and r_{pore} is the pore radius.

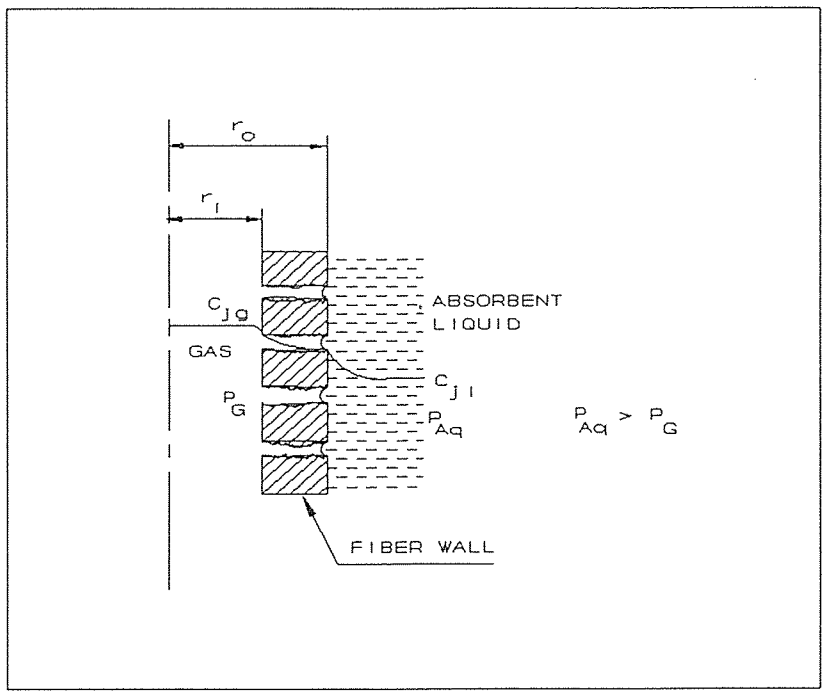

Figure 1 Concentration Profile for Absorbed Species in Gas and Liquid Phases

In the pressure swing absorption process, the pressure difference between the two phases should not exceed ΔP_{cr}. Thus if the difference P_{Aq} - P_G exceeds ΔP_{cr}, the liquid phase pressure has to be changed appropriately. For Celgard® X-10 hydrophobic polypropylene hollow fibers with 0.03 μm pore size, the value of ΔP_{cr} for many aqueous solutions is around 100 -150 psig. Thus the study and demonstration of the pressure swing absorption process may be easily carried out over a broad range of gas pressures. Further, these fibers may be used in nonoxidative environments successfully at temperatures up to 90°C. The concentration profiles of the absorbed gas species for gas and liquid phases are shown in Figure 1. It has three resistances in series, gas phase resistance, membrane resistance and liquid phase resistance. For a nonreactive system one can easily neglect the membrane phase resistance. But for a reactive system one has to consider the membrane resistance along with the other two resistances. The total resistance will be the sum of the individual resistances in series.

In this thesis, the feasibility of the RAPSAB process has been explored using two gas mixtures. Different types of RAPSAB cycles have been explored. A model for the absorption of the gas in the liquid in the absorption step of Mode 1 has also been formulated.

CHAPTER 2

EXPERIMENTAL

Pressure swing absorption of the gas mixture was carried out in a hollow fiber module schematically shown in Figure 2. The module resembles a shell-and-tube heat exchanger and contains a large number of microporous hydrophobic polypropylene hollow fibers (Celgard® X-10, 100 μm ID, 150 μm OD) of small outside diameter. The gas mixture was fed inside the fibers and the shell side was full of an absorbent liquid which does not wet the fibers. In this study, a gas mixture of N_2 and CO_2 was used to study the separation behavior; pure water was used as the absorbent. The liquid was stationary and its pressure was slightly higher than the gas pressure so that the gas-liquid interface was immobilized at each pore mouth on the outside diameter of the microporous membrane.

2.1. Initial Experimental Setup

This study was initiated with the setup shown in Figure 3. As experiments progressed, problems were discovered and the setup was modified. The original setup of Figure 3 is first described below.

The apparatus contains four different segments: (i) feed gas line; (ii) purified gas line; (iii) stationary absorbent liquid line; (iv) vacuum line; all segments were tied to a hollow fiber module (HFM) (Figure 2). During the

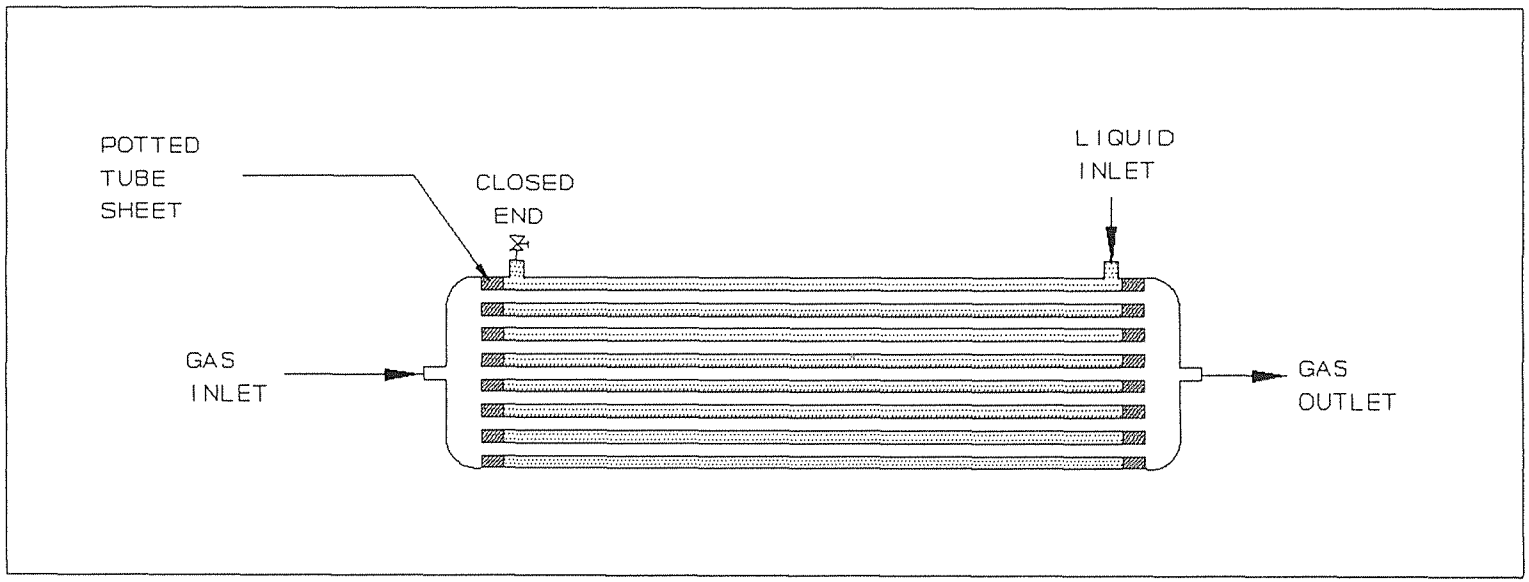

Figure 2 Schematic of a Hollow Fiber Module

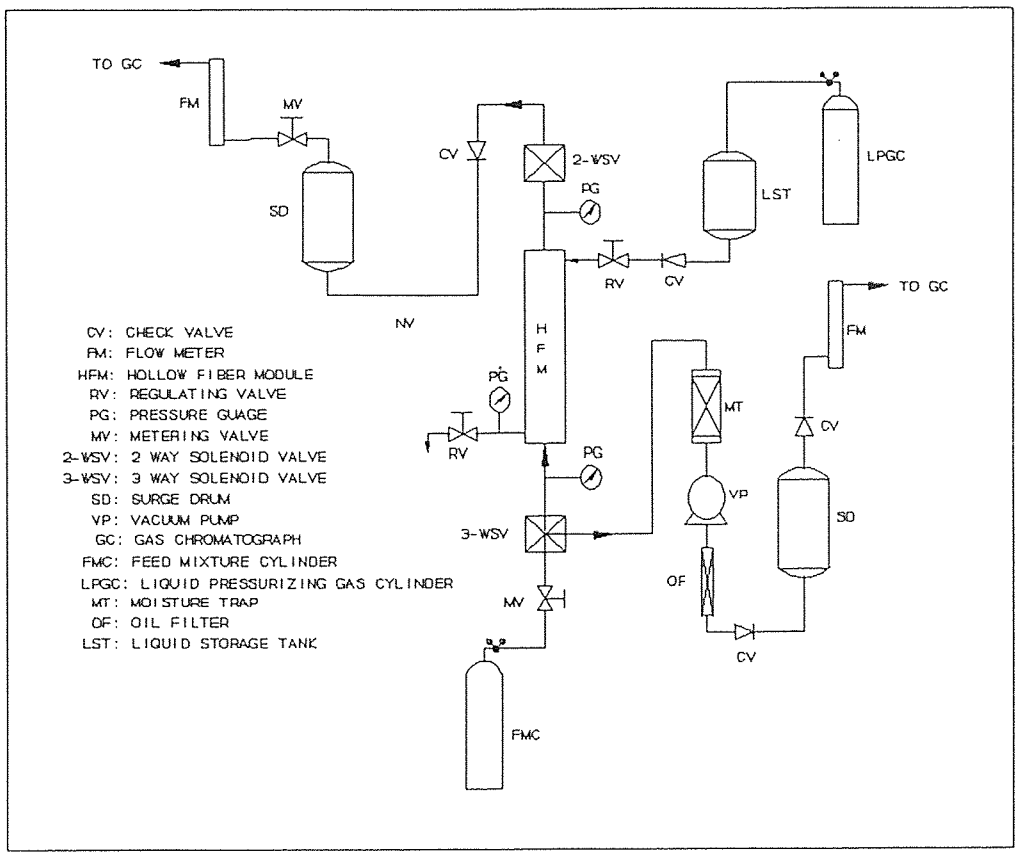

Figure 3 Preliminary Setup for RAPSAB Experiment

brief pressurization step at the start of a cycle, the feed gas mixture of a desired concentration was sent through a needle valve (R.S. Crum, Mountainside, NJ) and a three-way solenoid valve (3-WSV) (Components and Control, Carlstadt, NJ) to the tube-side of the hollow fiber module. The pressure of the feed gas stream was indicated by a pressure gauge (Matheson, E. Rutherford, NJ) before it entered the hollow fiber module.

The purified feed stream exited through the other end of the hollow fiber module during the high pressure feed flow part of the cycle and passed through a two-way (normally open) solenoid valve (2-WSV) (Components & Control, Carlstadt, NJ), and a check valve to the surge drum. The three-way solenoid valve at the inlet and the two-way valve at the exit of the module were controlled by a single timer. The purified gas was then taken to the gas chromatograph (Model No. 3700, Varian, Palo Alto, CA) to determine the composition. The flow rate of the purified gas stream was measured by a bubble flow meter.

The absorbent liquid storage tank (LST) was pressurized by a nitrogen gas cylinder. The liquid was introduced to the shell-side of the module through a check valve and a regulating valve. The exit regulating valve on the shell-side was kept closed during operation as the liquid absorbent was stationary. This valve was used to drain the liquid during shutdown. The pressure of the absorbent liquid was indicated by a 0-100 psi pressure gauge (Matheson, E.

Rutherford, NJ). This pressure was maintained at a level of 5-10 psi higher than the feed gas stream pressure so that the liquid did not wet the fiber pores. This was the case as the modules (HFM) made of microporous hydrophobic polypropylene hollow fibers were used with water as an absorbent for the gas mixture separation.

During the next part of the cycle (which starts with blowdown), the supply of the feed gas to the module was terminated by the three-way solenoid valve (3-WSV). The purified gas line was also detached from the hollow fiber module by shutting the two-way solenoid valve (2-WSV) in the exit line for the purified gas stream. The desorbed gas was taken out by a vacuum pump (VP) through the feed end of the hollow fiber module and through the alternate channel of the three-way solenoid valve (3-WSV). The moisture from this desorbed gas stream was eliminated by a Drierite column before the gas was sucked into the vacuum pump. The gas stream was then sent through an oil filter, a check valve, another surge drum and another valve respectively. The gas stream flow rate would be measured by an electronic flow meter before its composition was determined by the gas chromatograph.

To minimize the dead volume in the connecting lines, a thick walled polypropylene tubing (Imperial Eastman, Chicago, IL) of ⅛-inch outside diameter was utilized for connecting different equipment with minimum length.

2.1.1 Modifications of the Experimental Setup

To increase the rate of gas absorption in the stagnant absorbent liquid, it was necessary to raise the pressure in a relatively short period of time. To build up higher feed gas pressure in the fiber lumen, a few changes were incorporated in the experimental setup.

Earlier only one electronic timer was used to control two solenoid valves: the two-way solenoid valve at the exit end of the permeator and the three-way solenoid valve at the permeator inlet end. Therefore both valves would open and close simultaneously; this prevented a large pressure build up in the fiber lumen side since there was very little flow pressure drop in the hollow fiber lumen. If the solenoid valve at the exit end could be kept closed for some time when the feed gas was flowing into the fiber bore through the other side, it would then be possible to build up a certain pressure in the fiber lumen within a short time.

Further it is not an imperative that the feed has to be supplied for the given absorption time but it can be supplied only for a few seconds and then stopped; then the purified gas stream can be taken out through the exit end of the permeator. Therefore instead of a three-way solenoid valve at the feed inlet side of the permeator, two two-way (2-WSV) (all normally closed) solenoid valves (Components & Control, Carlstadt, NJ) were installed; one for the feed inlet and the other for the vacuum desorption line. At the exit end of the

permeator one three-way solenoid valve with one end closed was installed instead of the two-way solenoid valve to serve the purpose. One timer controlled two two-way solenoid valves at the permeator inlet end and a new timer controlled the three-way solenoid valve at the permeator exit end. The schematic of the new experimental setup is shown in Figure 4.

2.2 Fabrication of a Hollow Fiber Module

A module containing about 1200 fibers was fabricated to demonstrate the process. Fabrication of the hollow fiber module involved preparation of a fiber bundle, inserting it in a shell and potting the ends of fiber set with a resin mixture to form a tube sheet. Finally, the module had to be tested for any leakage before using it in the experimental setup. Leakage test can be done before potting the fibers in the shell to check fiber leakage; after potting the fibers in the shell, leakage test also has to be carried out so that the module is functional.

A mat of fibers (ID: 100 μm; OD: 150 μm; number: 1200) was first prepared on a polyethylene sheet over a laboratory bench top taking out six fibers at a time from a bobbin containing the fibers. They were cut to the desired length using a pair of scissors and both ends of the fibers were attached to a strip of scotch tape. The fibers were close to each other. Once such a mat was ready, the middle section of the fibers were kept straight and separated

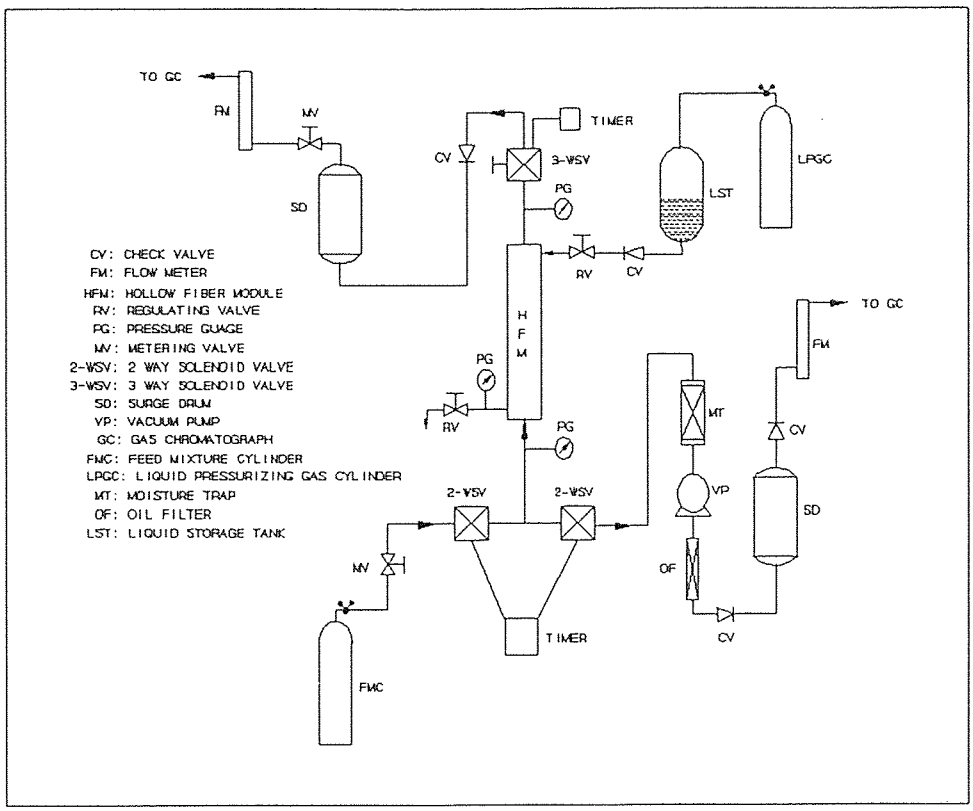

Figure 4 Final Setup for RAPSAB Experiment

while the fiber ends at each side were potted in a 2 inch long hexagonal nipple (Cajon) first with a silicone rubber adhesive (RTV11, General Electric, Waterford, NY) and then using an epoxy resin mixture prepared with 80:20 ratio of C-4 resin to activator D (Beacon Chemical Co., Mt. Vernon, NY). The hollow fibers were then pressurized internally with distilled up to a pressure level of 50 psig. Two fibers were found to be defective and were leaking during the test. They were separated and discarded. The mat of remaining 1198 fibers was rolled to prepare the fiber bundle. Distilled water was sprayed over the mat for easy handling of the fibers. Cotton threads (wetted) were tied loosely in the middle section as well as at the ends to keep the fibers together throughout the entire length. They were removed slowly as the fiber bundle was inserted into a specially constructed permeator shell made of 1/2 inch schedule 40 stainless steel pipe (length: 5.0 feet). The pipe was fitted with a 1/2 inch stainless steel street tee connection at each end. One opening of the tee was used to take out the fibers and the other opening was utilized as the absorbent liquid entry/exit point.

The shell was completely immersed in water when the fiber bundle was gently pulled through the shell assembly by using a cotton thread tied at one end of the bundle. Once the bundle was through both the ends, the excess water was removed and the assembly was air dried. The fibers were potted at both ends with an epoxy resin (resin C4; activator: D; ratio: 4:1; Beacon Chemical Co.,

Mt. Vernon, NY) mixture. After the tube sheet formation was complete, the effective length of the module was determined to be 160 cm. The packing fraction of the module was calculated to be approximately 12 percent.

Before a new permeator was used in the gas purification loop, it was necessary to test it for any leak which could be either in the tube sheet due to incomplete wetting of the fiber by the resin or due to a defect or defects on the fiber surface or wall. leak testing was done in the following manner.

The permeator shell was filled with distilled water and the shell side was pressurized by a N_2 cylinder, keeping the other shell side port completely closed. The pressure was increased slowly to 50 psig in steps of 10 psig. Observations were made at each pressure level for any sign of water coming out through the tube sides. Finally, the pressure was maintained at 50 psig and the permeator was checked for any further leakage of water through the tube sides.

2.3 Gas Chromatograph Calibration

During pressure swing absorption experiments, the composition of the purified gas stream was measured by a gas chromatograph (GC) (model 3700; Varian Instruments, Palo Alto, CA) having a thermal conductivity detector (TCD). The response from the detector was recorded by a digital reporting integrator (model 3390A; Hewlett Packard, Paramus, NJ). It was, therefore, necessary to calibrate the instrument prior to any experiments. The GC calibration was

carried out in the following manner.

The desired sample was injected into the GC through a gas sampling valve (GSV). The sample loop had a volume of 0.25 ml. Porapak N 80/100 mesh columns were used in both sides "A" and "B" of the GC. However only the "B" side, which contained the GSV, was used for this study. It has a 6-port valve (Figure 5) where sample flows through the loop, while carrier gas is directed to the column (A). When the valve is actuated, carrier gas flushes the sample out of the loop into the column, while the sample stream continues to flow through a by-pass port (B). The 6-port valve requires two actuations for each injection: switch to fill loop, switch to inject sample. The temperatures of the oven, injector, TCD and the filament were maintained at 40°C, 120°C, 120°C, 150°C respectively. Pure helium carrier gas was supplied at a delivery pressure of 80 psig. Carrier gas flow rates through columns "A" and "B" were kept around 30 cc/min. The TCD current was maintained at 166 mamp. The GC operation was automated for gas sampling at regular intervals. The 6-port GSV was driven by a solenoid-operated actuator, which was electronically controlled by a four-interval digital valve sequence programmer (Valco Instruments, Houston, TX), with preset time intervals.

Calibration of the GC column was done for both CO_2 and N_2. CO_2-N_2 gas mixtures of known compositions were injected. Each mixture was injected at least five times and then an average absolute area was calculated for each gas

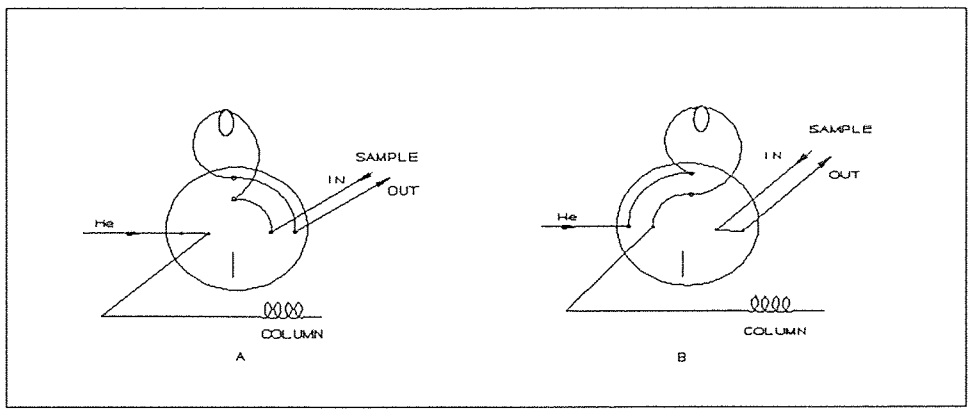

Figure 5 6-Port Gas Sampling in GC

species. A few calibration points were obtained using various primary standard mixtures. Others were obtained by carefully controlled mixing of pure CO_2 with pure N_2 in different proportions using a modular Dyna Blender (model 8250; Matheson, E. Rutherford, NJ). For the extreme ends of the calibration curve, pure CO_2 and pure N_2 were also injected and the absolute area was taken. The calibration curves (area vs. composition) for CO_2 and N_2 are shown in Figure 6 and 7 respectively.

2.4 Experimental Procedure

To start an experiment, the shell side absorbent liquid (e.g., water) was first pressurized to a pressure slightly higher than the pressure of the incoming feed gas to the fiber lumen. The absorbent liquid remained stationary on the shell side.

The apparatus was operated under three modes of operation.

2.4.1 Mode 1: This mode of operation corresponded to the original setup of Figure 3. Feed gas mixture was allowed to enter through the inlet three-way solenoid valve (Figure 8) for a certain time while the purified product gas mixture was taken out through the two-way solenoid valve at the exit end of the permeator. Then the two-way solenoid valve and the three-way solenoid valve were closed, simultaneously the other end of the three-way solenoid valve was

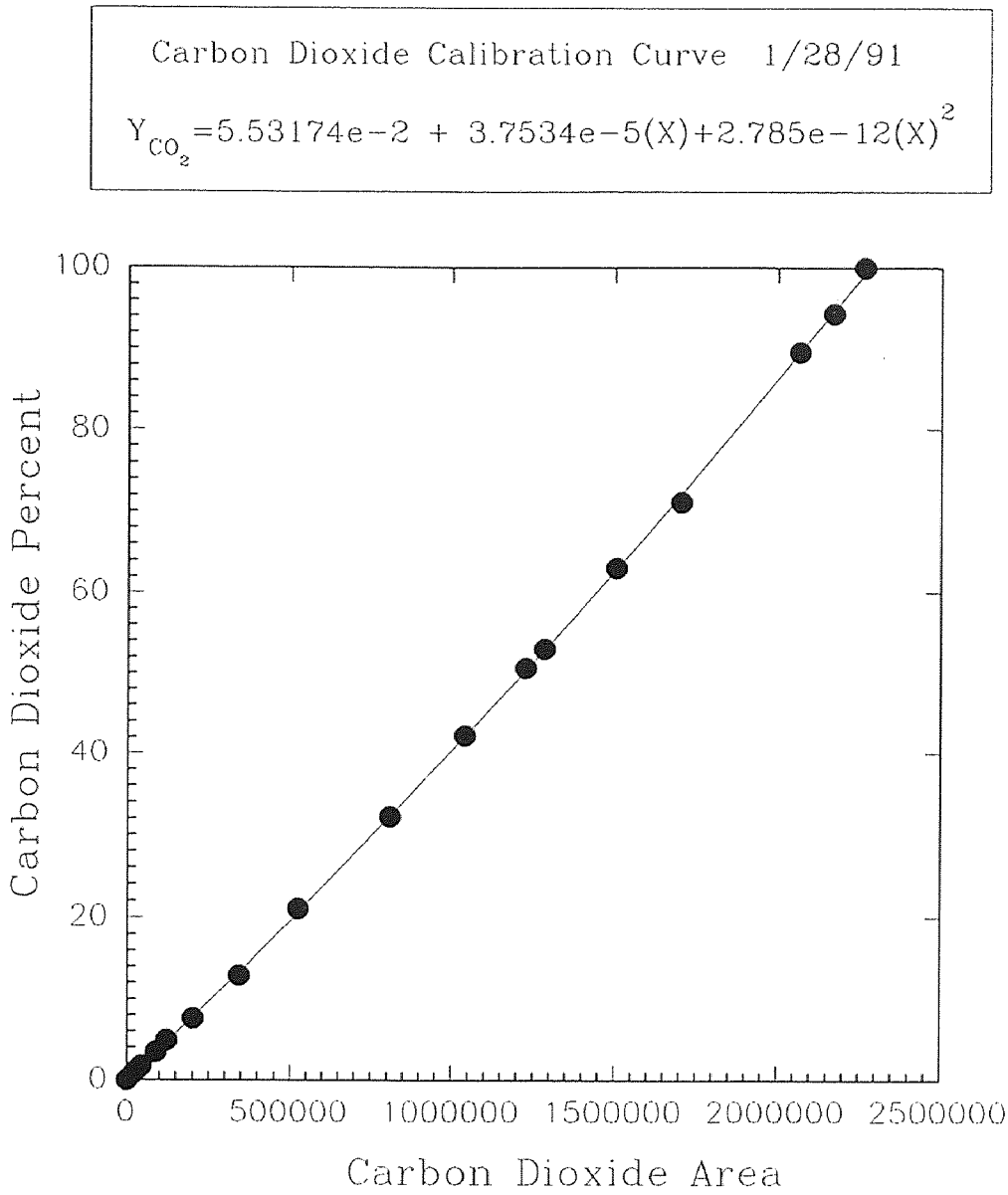

Figure 6 Calibration Curve for Carbon Dioxide

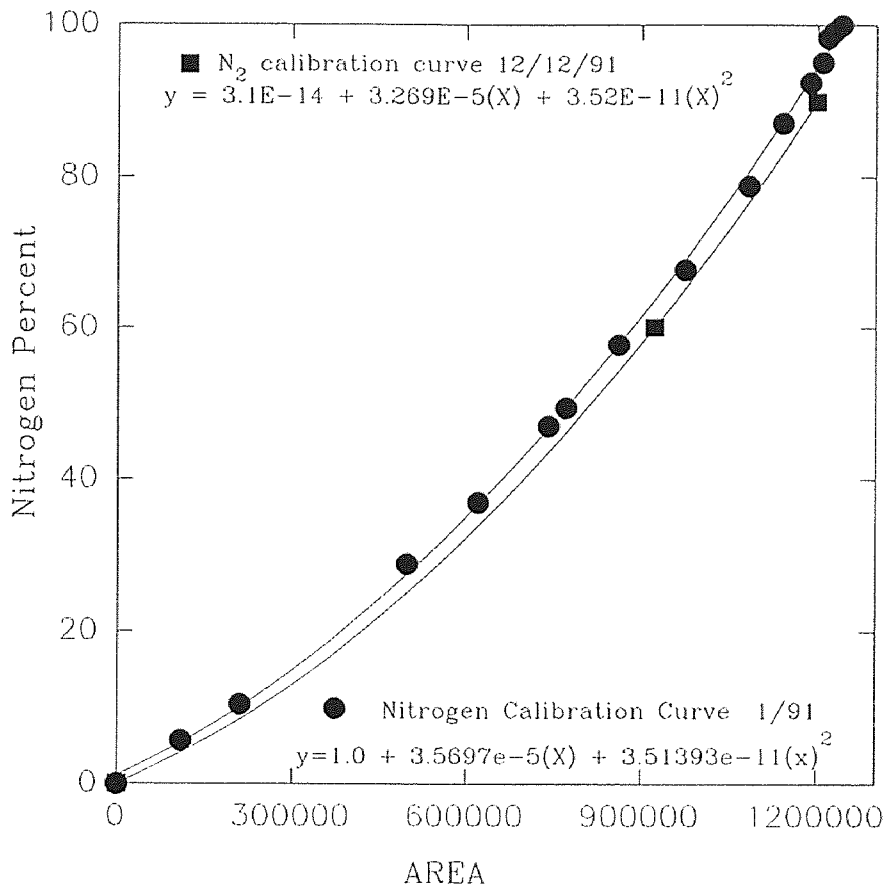

Figure 7 Calibration Curve for Nitrogen

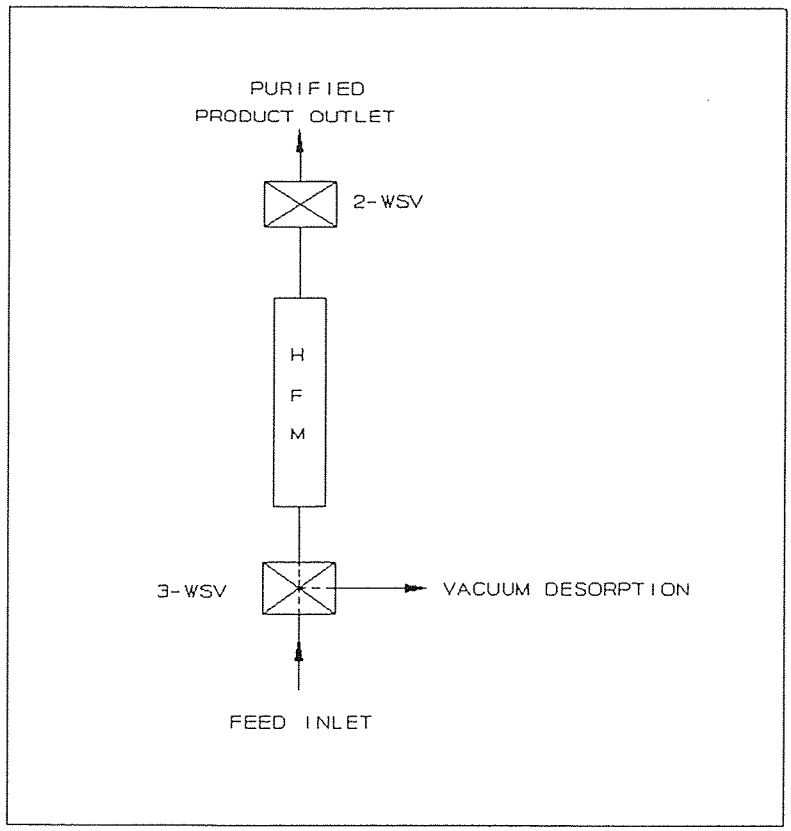

Figure 8 Solenoid Valve Locations in RAPSAB Apparatus

opened for the vacuum desorption for a certain length of time. This completed one complete cycle of operation. The pressure vs. time profile for this mode of operation is given in Figure 9.

2.4.2 Mode 2: Feed was allowed to enter for a certain time through valve 1 (Figure 10) until the required pressure had been attained, keeping both valves 2 and 3 closed. Then valve 1 was also closed i.e., the whole module was isolated for a brief period of time to introduce an artificial delay time during which absorption proceeds. Subsequently, valve 3 was opened momentarily to take out the purified gas. Finally, valve 3 was allowed to close and simultaneously valve 2 was opened for desorption. This completed one whole cycle of operation. The pressure vs. time profile for this mode of operation is given in Figure 11.

2.4.3 Mode 3: Feed was allowed to enter for a certain time through valve 1 (Figure 10) until the required pressure had been reached with both valves 2 and 3 being closed. After that valve 1 was closed and simultaneously valve 3 was opened for a short time just to take out the purified front of the mixture of gases. Then it was closed and simultaneously valve 2 was opened for desorption. This

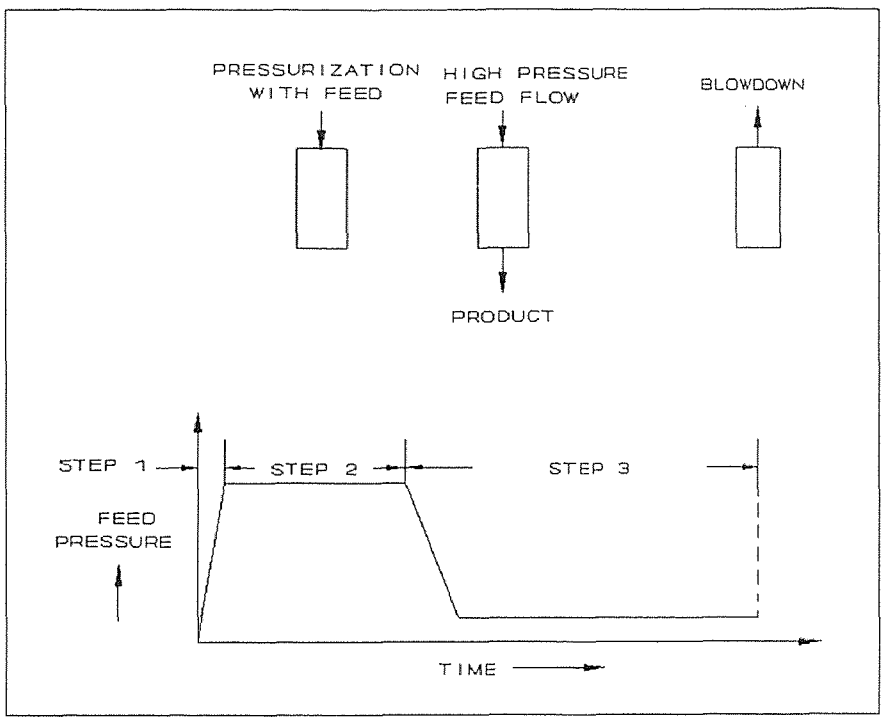

Figure 9 Pressure vs. Time Profile; Mode 1

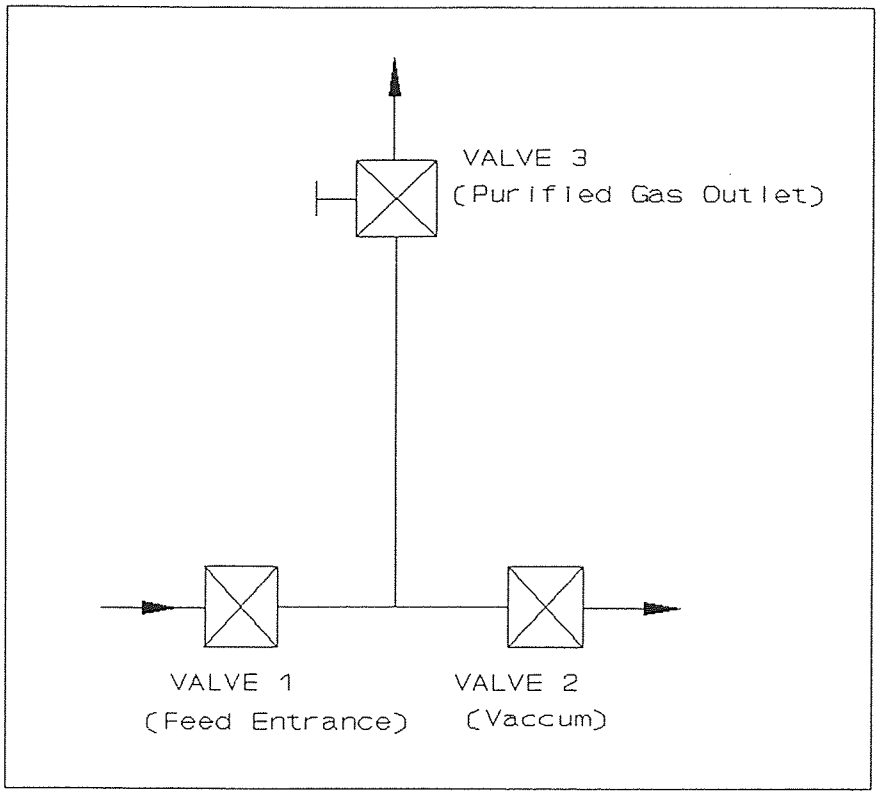

Figure 10 Solenoid Valve Locations in RAPSAB Apparatus; Modes 2 and 3

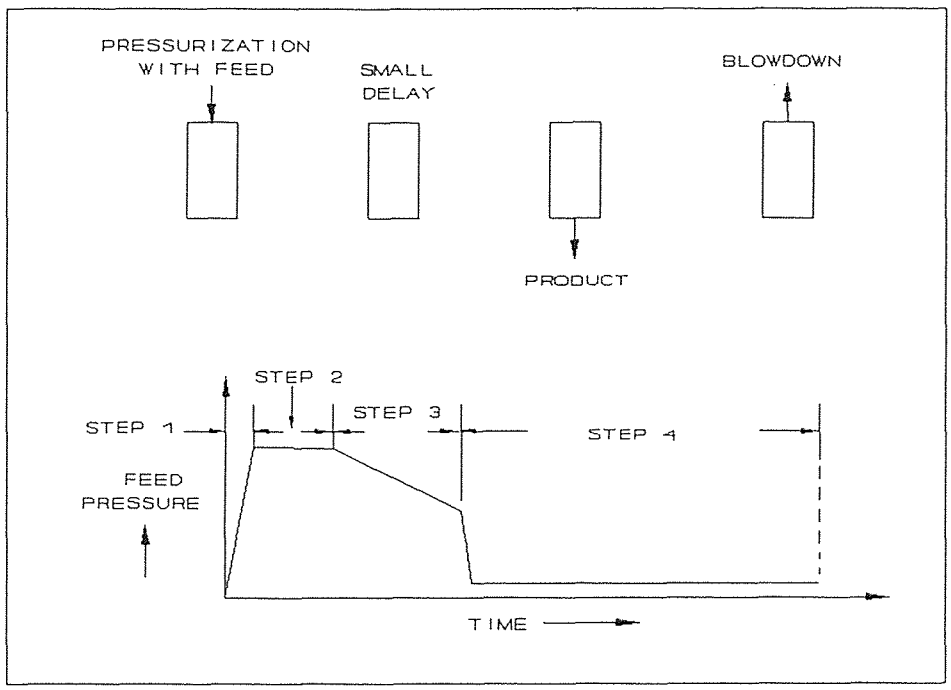

Figure 11 Pressure vs. Time Profile; Mode 2

completed one whole cycle of operation. The pressure vs. time profile for this mode of operation is given in Figure 12. The difference between modes 2 and 3 lie in the durations of step 2 and step 3.

2.5 A Typical Experiment for Each of Three Modes

2.5.1 Mode 1: A typical experimental run for Mode 1 is described below. The time sequence here refers to the experiment no. 2-1 in Table 2 in Results and Discussion.

Feed mixture (CO_2: 10.12%, balance: N_2) was allowed to enter the permeator through the feed inlet end of the three-way solenoid valve (Figure 8) while the other end of the three-way solenoid valve was closed and the two-way solenoid valve at the exit end of the permeator was kept open. The flow rate of the feed mixture was maintained by the metering valve after the feed mixture cylinder. This process was continued for 9.6 seconds. After that, the feed inlet of the three-way solenoid valve and the two-way valve at the exit end of the permeator were closed and simultaneously the other end of the three-way solenoid valve was opened for blowdown and vacuum desorption for 15.6 seconds. This constituted one complete cycle of operation. Such cycles were

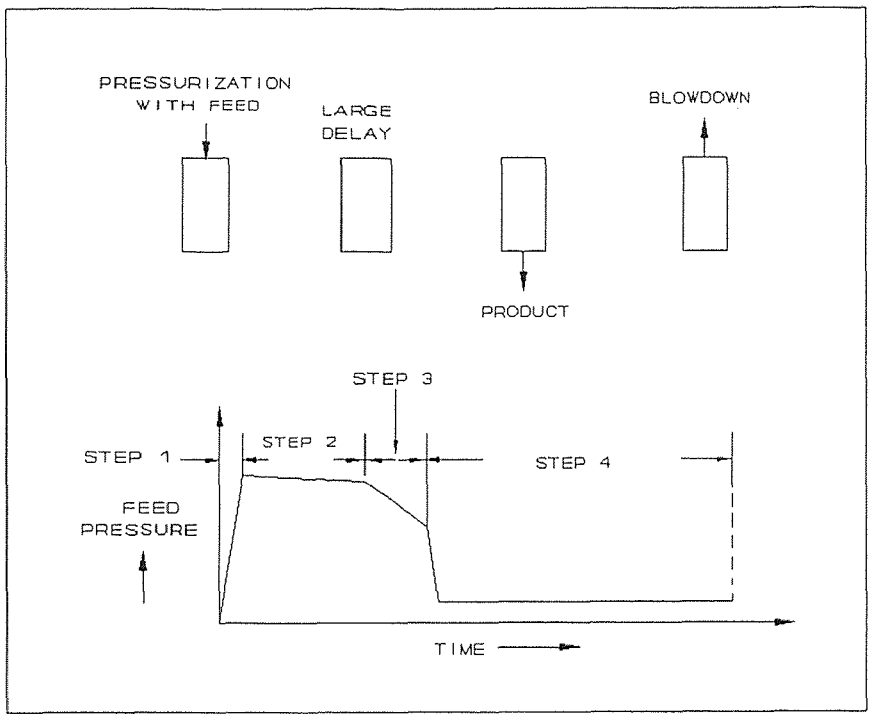

Figure 12 Pressure vs. Time Profile; Mode 3

repeated continuously for 3 hours. After 2 hours, purified gas sample from the surge drum was injected into the GC for analysis. The flow rate was controlled by the metering valve after the surge drum. A typical flow rate of 2-5 std. cc/min was maintained. Gas sample was periodically injected into the GC at approximately 6 minute intervals. The experiment was stopped when no change in gas composition was noticed in five consecutive sample analyses.

2.5.2 Mode 2: A typical experimental run for the operational Mode 2 is described below. The time sequence here refers to the experiment no. 2-1 in Table 3 of Results and Discussion.

Feed mixture (CO_2: 10.12%, balance: N_2) was allowed to enter the permeator through the two-way solenoid valve (valve # 1, Figure 10) while valve # 2 and valve # 3 were kept closed. The flow rate of the feed mixture was maintained by the metering valve after the feed mixture cylinder. This process was continued for 7 seconds. The feed flow was then stopped by closing valve # 1. All the valves were closed at this time; this condition was maintained for about 30 seconds. This constituted artificial delay to gas movement out of the system. Then valve # 3 was opened for about 4 seconds to take out the purified gas stream from the

permeator. Next, valve # 3 was closed and simultaneously valve # 2 was opened for vacuum desorption for 40 seconds. This constituted one complete cycle of operation. Such cycles were repeated continuously for 3 hours. After 2 hours, purified gas sample from the surge drum was injected into the GC for analysis. The flow rate was controlled by the metering valve after the surge drum. A typical flow rate of 2-5 cc/min was maintained. Gas sample was periodically injected into the GC at intervals of about 6 minutes. The experiment was stopped when no change in gas composition was noticed in five consecutive sample analyses.

2.5.3 Mode 3: A typical experimental run is described below. The time sequence here refers to the experiment no. 1 in Table 5 of Results and Discussion.

Feed mixture (CO_2: 10.12%, balance: N_2) was allowed to enter the permeator through valve # 1 (Figure 10) for 1 second. The flow rate was controlled by the inlet metering valve before the valve # 1. During this time valve no. 2 and 3 were closed. Then valve no. 1 was closed and simultaneously valve no. 3 was opened for 9.2 seconds and feed mixture was allowed to go all the way to the exit end for absorption and the purified front of it was taken

out from the exit and collected in the surge drum. Valve no. 3 was then closed and simultaneously valve no. 2 was opened for 40 seconds for desorption. This constituted one complete cycle of 51.2 seconds. Such cycles were repeated continuously for 3 hours. After 2 hours, purified gas sample from the surge drum was injected into the GC for analysis. The flow rate was controlled by the metering valve after the surge drum. A typical flow rate of 5-10 cc/min was maintained. Gas sample was periodically injected into the GC at intervals of about 6 minutes. The experiment was stopped when no change in gas composition was noticed in five consecutive sample analyses.

CHAPTER 3

RESULTS AND DISCUSSION

Three hollow fiber modules were used for gas absorption experiments. The characteristics of each such module are listed in Table 1. Module no. 1 and Module no. 2 were already available from different projects and Module no. 3 was prepared as described earlier.

Some preliminary experimental data were obtained using module no. 1 and experimental mode 1; these are identified in Table 2. The time setup for the solenoid valves, the corresponding feed pressure and the mode of operation for different experimental runs have been identified in Tables 3 and 4 for the other set of experiments. The purification results of each such run are also available in Tables 5 and 6 respectively. All experiments were carried out with a feed gas mixture of 10.12% CO_2 and balance N_2 with feed pressure ranging from 5 - 40 psig; the absorbent liquid was pure water for all experiments.

A few observations can be made from these experimental results. From the results in Table 2, it can be concluded that when feed was flowing through the fibers at a very low flow rate, it was very difficult to raise the pressure (only 5 psig could be reached) in the fiber lumen; as a result the purified gas composition was not that much reduced from the feed gas composition since higher pressure enhances the degree of gas absorption.

Due to this reason, the experimental setup was modified as described

Table 1 Characteristics of Hollow Fiber Modules

	Module 1	Module 2	Module 3
Effective Length	39.5 cm	160 cm	160 cm
No. of Fibers	6000	600*	1198
Fiber ID	100 μm	100 μm	100 μm
Fiber OD	150 μm	150 μm	150 μm
Surface Area	11168 cm^2	2262 cm^2	6022 cm^2
Void Fraction	62.8%	66.5%	89.2%

* Two identical sets of 300 fibers were available in this permeator in a well mixed condition. Only one set of 300 fibers was used for the experiment.

Table 2 Preliminary Experimental Data Obtained with Module No. 1 Using Experimental Mode 1

Experiment No.	Mode of Operation	Pressure in Fiber Lumen (psig)	Cycle Time (seconds)		Composition of the Inlet Gas Mixture	Composition of the Outlet Stream
			Absorption	Desorption		
2-1	1	5	9.6	15.6	CO_2: 10.12% N_2: Balance	CO_2: 2.33% N_2: Balance
2-2	1	5	8.6	15.6	CO_2: 10.12% N_2: Balance	CO_2: 1.84% N_2: Balance

Table 3 Time Setup for Solenoid Valves for the Experiments Using Modes 2 and 3*

Experiment No.	Module No.	Mode of Operation	Pressure in fiber lumen (psig)	Valve # 1		Valve # 3		Valve # 2	
				Open (seconds)	Close (seconds)	Close (seconds)	Open (seconds)	Close (seconds)	Open (seconds)
3-1	2	2	40	7	74	37	4	41	40
3-2	3	2	40	7	75	37	5	42	40
3-3	3	2	20	7	75	37	5	42	40
3-4	3	3	40	2	44	2	4	6	40
3-5	3	3	40	2	43.6	2	3.6	5.6	40
3-6	3	3	40	1	43.6	1	3.6	4.6	40
3-7	3	3	20	2	49.0	2	9	11	40
3-8	3	3	20	1	49.2	1	9.2	11.2	40

* The desorption time was kept constant at 40 seconds in this set of experiments.

Table 4 Duration of Different Settings of Solenoid Valves Keeping the Desorption Time Constant at 24 seconds using Mode 3

Experiment No.	Module No.	Mode of Operation	Pressure in fiber lumen (psig)	Valve # 1		Valve # 3		Valve # 2	
				Open (Seconds)	Close (Seconds)	Close (Seconds)	Open (Seconds)	Close (Seconds)	Open (Seconds)
4-1	3	3	30 ~ 35	1	35	2	10.0	12	24
4-2	3	3	30 ~ 35	1	34.8	2	9.8	11.8	24
4-3	3	3	30 ~ 35	1	34.5	2	9.5	11.5	24
4-4	3	3	30 ~ 35	1	34.0	1	10.0	11.0	24
4-5	3	3	30 ~ 35	2	32.5	2	8.5	10.5	24
4-6	3	3	30 ~ 35	2	32.3	2	8.3	10.3	24
4-7	3	3	25 ~ 30	2	33.5	2	9.5	11.5	24
4-8	3	3	25 ~ 30	2	33.3	2	9.3	11.3	24

Table 5 Experimental Results using Modules 2 and 3 with Experimental Modes 2 and 3*

Experiment No.	Module No.	Mode of Operation	Feed Pressure (psig)	Feed Gas Composition	Purified Gas Composition
3-1	2	2	40	CO_2: 10.12% N_2: Balance	CO_2: 5.00% N_2: Balance
3-2	3	2	40	CO_2: 10.12% N_2: Balance	CO_2: 4.50% N_2: Balance
3-3	3	2	20	CO_2: 10.12% N_2: Balance	CO_2: 3.50% N_2: Balance
3-4	3	3	40	CO_2: 10.12% N_2: Balance	CO_2: 3.52% N_2: Balance
3-5	3	3	40	CO_2: 10.12% N_2: Balance	CO_2: 3.20% N_2: Balance
3-6	3	3	40	CO_2: 10.12% N_2: Balance	CO_2: 2.22% N_2: Balance
3-7	3	3	20	CO_2: 10.12% N_2: Balance	CO_2: 2.69% N_2: Balance
3-8	3	3	20	CO_2: 10.12% N_2: Balance	CO_2: 1.99% N_2: Balance

* The desorption time was kept constant at 40 seconds in this set of experiments.

Table 6 Experimental Results using Module 3 with Experimental Mode 3*

Experiment No.	Module No.	Mode of Operation	Feed Pressure (psig)	Feed Gas Composition	Purified Gas Composition
4-1	3	3	30 ~ 35	CO_2: 10.12% N_2: Balance	CO_2: 2.4% N_2: Balance
4-2	3	3	30 ~ 35	CO_2: 10.12% N_2: Balance	CO_2: 2.2% N_2: Balance
4-3	3	3	30 ~ 35	CO_2: 10.12% N_2: Balance	CO_2: 2.1% N_2: Balance
4-4	3	3	30 ~ 35	CO_2: 10.12% N_2: Balance	CO_2: 1.9% N_2: Balance
4-5	3	3	30 ~ 35	CO_2: 10.12% N_2: Balance	CO_2: 1.89% N_2: Balance
4-6	3	3	30 ~ 35	CO_2: 10.12% N_2: Balance	CO_2: 1.67% N_2: Balance
4-7	3	3	25 ~ 30	CO_2: 10.12% N_2: Balance	CO_2: 1.6% N_2: Balance
4-8	3	2	25 ~ 30	CO_2: 10.12% N_2: Balance	CO_2: 1.54% N_2: Balance

* Desorption time was kept constant at 24 seconds in these set of experiments.

earlier and few sets of experiments were performed using experimental modes 2 and 3. The first experiment (3-1) in Table 5 shows that the gas separation performance was very poor even though the fiber lumen pressure was built up to around 40 psig. This was because the flow rate used was too high to build up the required pressure in the fiber lumen in 7 seconds only; as a result a significant amount of gas mixture went all the way to the exit end of the permeator up to the three-way solenoid valve without good separation. This is because of very low residence time of the gas mixture inside the effective length of the fiber where absorption was taking place. Further there was a significant amount of void space in between the exit end of the permeator and the inlet of the three-way solenoid valve; this did create the problem in experimental mode 2 because the gas mixture, coming to this void space without achieving good separation, would not be purified during the delay time. Additionally they were taken out first as the product when the three-way solenoid valve was opened to take out the purified product.

However, using the same mode of operation, the performance was better with module no. 2 since its length (Table 1) was much more than that of module no. 1; so the residence time for the incoming gas mixture was higher in the effective fiber length. Experiment No. 3-3 in Table 5 shows even better performance since the volumetric flow rate was low which further increased the residence time even though the fiber lumen pressure was less than those in the

experiment nos. 3-1 and 3-2. This implies that residence time magnitude is more important than the pressure in the fiber lumen. This mode of operation, however, did not help in achieving substantial gas purification. It was then decided to change the mode of operation to mode 3 which had a small delay as in Keller's rapid pressure swing adsorption (PSA) (Keller et al. (1980)). In these set of experiments the vacuum desorption time was constant at 40 seconds and other parts of the whole cycle were changed as required to study the effect. The maximum purification was obtained in experiment no. 8 in Table 5 which had a fiber lumen pressure of 20 psig only.

The focus was then temporarily shifted to the magnitude of the desorption time. Was it too long or too little? In the next set of experiments lowering of the vacuum desorption time was attempted to see whether there was any result or not. A set of experiments were performed with a new module, identified in Table 6 with a constant vacuum desorption time of only 24 seconds.

It was observed that the lowering of vacuum desorption time from 40 seconds to 24 seconds had no effect. The level of purification obtained with 40 seconds of vacuum desorption time was also achieved in the 24 seconds case. Eventually, the decrease in vacuum desorption time decreased the total cycle time and increased the rate of production of purified gas stream considerably.

CHAPTER 4

THEORETICAL MODEL DEVELOPMENT

Development of a model for RAPSAB is an integral part of this problem solving. Solution of the mass balance equations of gas as well as liquid phase can provide a guideline for the optimum time cycle for absorption as well as desorption. Cycle time also requires consideration of gas flow rate, length of the hollow fiber device, the rate of gas absorption and a number of other factors. A solution of the complete set of governing equations for various parametric conditions will provide guidelines to the selection of optimum cycle time for a given system and conditions. For this purpose, analyzing one fiber in the device is sufficient assuming that a particular annular layer of liquid around it only need to be considered for absorption. Such a single fiber is shown in Figure 13. Happel's free surface model (Happel, 1959) can be used to determine the equivalent annular layer thickness. The model has been applied successfully in analyzing hollow fiber reverse osmosis systems (Gill and Bansal, 1973).

Mass balance equations and the boundary conditions in both gas and liquid phases can be developed for the gas absorption part of the cycle on the basis of the following assumptions:

- Gas behavior is ideal.
- The absorption process is isothermal.

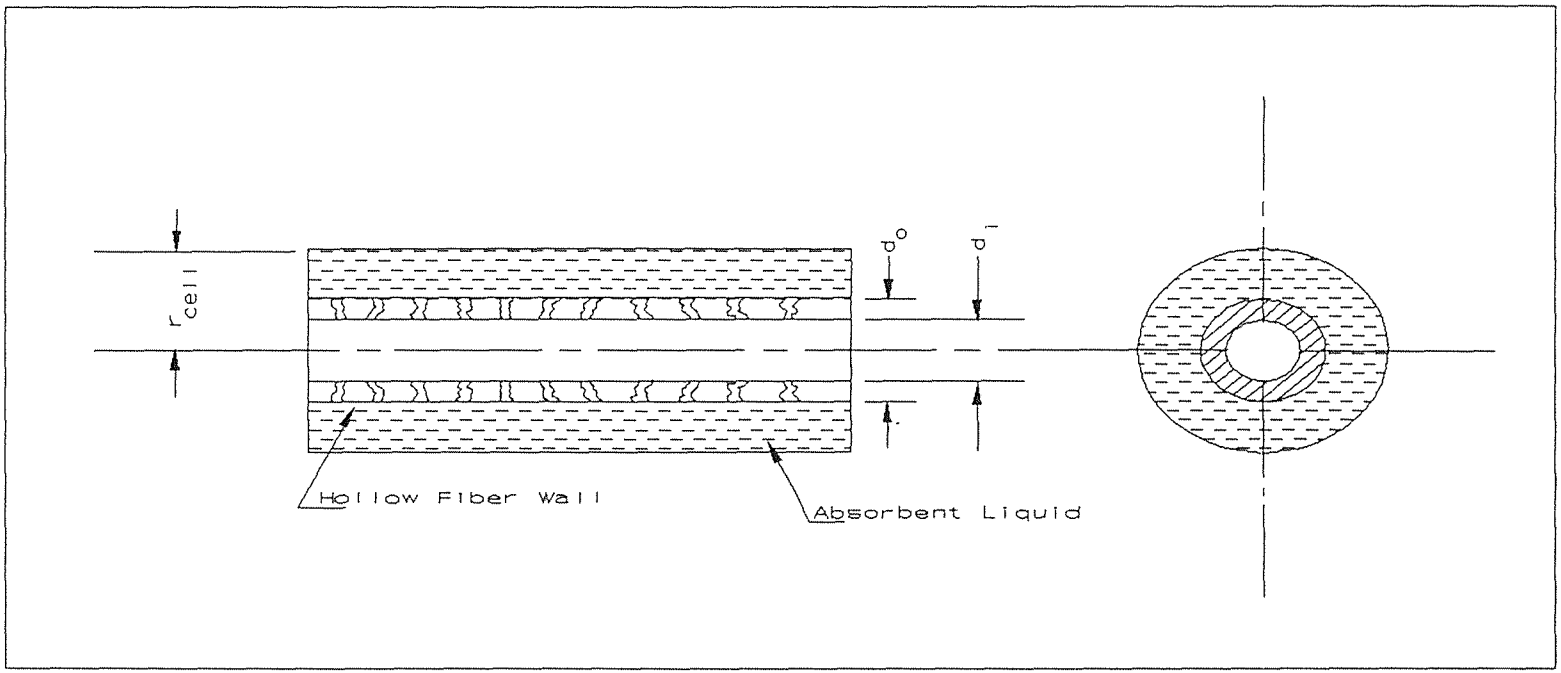

Figure 13 Single Microporous Hollow Fiber with an Annular Absorbent Liquid Layer in a Unit Cell and Gas Flowing in Fiber Lumen

- Diffusion coefficients and solubility coefficients are constants and independent of concentration.
- No reaction takes place between the liquid and any gas component.
- The components of the gas phase are always in equilibrium with the absorbed components at the gas- liquid interface and Henry's law is valid.
- The flow pattern within the fiber bore can be described using the model of a plug flow with axial diffusion.
- The mass transfer mechanism from the bulk gas phase to the outside surface of the fiber where the gas-liquid interface is located, is described by a first order model based upon a constant diffusion coefficient and a concentration difference between the two locations.
- The pressure drop in the fiber lumen is governed by Hagen-Poiseuille equation for the compressible fluid without any effect of radial absorption.
- The deformation of the fibers due to the higher external pressure of the liquid is negligible so that the fiber size and the void fraction remain unaltered.
- End effects are negligible.

On the basis of the above assumptions the mass balance equations for the gas and liquid phases are:

$$\frac{\partial C_{jg}}{\partial t} = D_{jg}\frac{\partial^2 C_{jg}}{\partial z^2} - \frac{\partial(v_g C_{jg})}{\partial z} - \frac{4K_{jg}d_o}{d_i^2}\left[C_{jg} - \frac{C_{jl}|_{r=r_o}}{H_j RT}\right] \tag{3}$$

$$\frac{\partial C_{jl}}{\partial t} = D_{jl}\left[\frac{\partial^2 C_{jl}}{\partial r^2} + \frac{1}{r}\frac{\partial C_{jl}}{\partial r} + \frac{\partial^2 C_{jl}}{\partial z^2}\right] \tag{4}$$

The initial and boundary conditions for the gas phase are:

$$C_{jg}|_{z,t=0} = 0 \tag{5}$$

$$v_g C_{jg}|_u = v_g C_{jg}|_{z=0} - D_{jg}\frac{\partial C_{jg}}{\partial z}|_{z=0} \tag{6}$$

$$-D_{jg}\frac{\partial C_{jg}}{\partial z}|_{z=l} = 0 \tag{7}$$

The initial and boundary conditions for the liquid phase are:

$$C_{jl}|_{z,r,t=0} = 0 \tag{8}$$

$$-D_{jl}\frac{\partial C_{jl}}{\partial r}|_{r=r_o} = K_{jg}\left[C_{jg} - \frac{C_{jl}|_{r=r_o}}{H_j RT}\right] \tag{9}$$

$$\frac{\partial C_{jl}}{\partial r}|_{r=r_c} = 0 \tag{10}$$

$$\frac{\partial C_{jl}}{\partial z}|_{z=0} = 0 \tag{11}$$

$$\frac{\partial C_{jl}}{\partial z} \Big|_{z=l} = 0 \tag{12}$$

4.1 Solution Strategy

There are a variety of methods such as finite difference, orthogonal collocation, and method of lines available for the numerical solution of partial differential equations in time and spatial dimensions. Method of lines could be ideal to solve these set of partial differential equations in which the spatial gradients are discretized by finite difference equations thus reducing the system of partial differential equations to a coupled system of ordinary differential equations in the time domain (Davis, 1983; Brian et al., 1987).

Following Brian et al. (1987), the absorption column length and the annular section between the fiber outside radius and the free surface radius could be discretized into NB and NR points, respectively. The spatial derivatives in equations (3) and (4) could be approximated using finite difference formulas. The procedure then will transform equations (3) and (4) for a single species to [NB + NB x NR] ordinary differential equations in normalized time parameter. The resulting initial value problem could be solved using standard International Math and Statistical Library (IMSL) routines such as IVPAG (Initial Value Problem Adamson Gear). The development of the program is in progress.

REFERENCES

Beaver, E. R., and P. V. Bhat. 1988. "New Membrane Material and Processes for Separation." (Eds.) K. K. Sirkar and D. R. Lloyd, AIChE Symp. Ser., 261, Vol. 84, 113.

Brian III, B. F., I. Zwiebel, and R. S. Artigue. 1987. "Numerical Simulation of Fixed-bed Adsorption Dynamics by the Method of Lines." AIChE Symp. Ser., 259, 80.

Callahan, R. W. 1988. "New Membrane Materials and Processes for Separation." (Eds.) K. K. Sirkar and D. R. Lloyd, AIChE Symp. Ser., 261, Vol. 84, 57.

Davis, M. E. 1984. "Numerical Methods and Modelling for Chemical Engineers." John Wiley and Sons, Inc., New York.

Gill, W. N., and B. Bansal. 1973. "Hollow Fiber Reverse Osmosis Systems Analysis and Design." AIChE J. 19(4), 823-831.

Guha, A. K., S. Majumdar, and K. K. Sirkar. 1992. "Gas Separation Modes in a Hollow Fiber Contained Liquid Membrane Permeator." Ind. Eng. Chem. Res. 31, 593 - 604.

Happel, J. 1959. "Viscous Flow Relative to Arrays of Cylinders." AIChE J. 5(2), 174-177.

Karoor, S. 1992. Ph.D Dissertation, Stevens Institute of Technology.

Keller G. E., and R. L. Jones. 1980. "A New Process for Adsorption Separation of Gas Streams." ACS Symp. Ser., 135, 275.

Qi, Z., and E. L. Cussler. 1985a. "Microporous Hollow Fibers for Gas Absorption. I. Mass Transfer in the Liquid." J. Membrane Sci., 23, 321-332.

_____. 1985b. "Microporous Hollow Fibers for Gas Absorption. I. Mass Transfer Across the Membrane." J. Membrane Sci., 23, 333-345.

Reid, R. C., J. M. Prausnitz, and T. K. Sherwood. c1987. "The Properties of Gases and Liquids." 4th ed. New York: McGraw Hill.

Ritter, J. A., and R. T. Yang. 1989. "Air Purification and Solvent Concentration by Pressure Swing Adsorption." Prepared for Presentation at: Pollution Prevention for the 1990's: A Chemical Engineering Challenge, December

Spilman, R. W. 1989. Chemical Engineering Progress. 41, January.

Ward, W. J., and W. L. Robb. 1967. "Facilitated Transport of CO_2 Across a Liquid Film." Science 156, 1481 - 1483.

Yang, R. T. 1987. "Gas Separation by Adsorption Processes", Butterworths, Boston.

Yang, M. C., and E. L. Cussler. 1986. "Designing Hollow-fiber Contactors." AIChE J. 32, 1910-1916.