SYNTHESIS OF MULTIAREA GRID POWER SYSTEMS

by

Bharat C. Patel

Dissertation submitted to the Faculty of the Graduate School
of the New Jersey Institute of Technology in partial fulfillment
of the requirements for the degree of
Doctor of Engineering Science
1979

APPROVAL SHEET

Title of Dissertation: SYNTHESIS OF MULTIAREA GRID POWER SYSTEMS

Name of Candidate : Bharat C. Patel
Doctor of Engineering Science, 1979

Dissertation and
Abstract Approved :

Dr. Khalil Denno
Professor
Electrical Engineering Department

Dr. Andrew Meyer

Dr. Edwin Cohen

Dr. John Rausen

Dr. Elliot Farber

Date Approved:

VITA

Name: Bharat C. Patel

Degree and date to be conferred: D. Eng. Sc., 1979

Secondary education: St. Xavier's High School, 1963

Collegiate institutions attended	Dates	Degree	Date of Degree
N. J. Institute of Technology	70-79	D. Eng. Sc.	1979
Utah State University	68-69	M.S.	1970
Gujerat University	65-68	B.E. (Elec.)	1968

Major: Electrical Engineering

Minors: Mathematics, Physics

Positions held: Presently holds the position of Administrator, Office of Technical Assistance with the New Jersey Department of Energy. Prior positions include employment with the New Jersey Board of Public Utility Commissioners, in various capacities including Chief, Bureau of Energy Resources.

ABSTRACT

Title of Dissertation: SYNTHESIS OF MULTIAREA GRID POWER SYSTEMS

Bharat C. Patel, Doctor of Engineering Science, 1979

Dissertation directed by: Professor Khalil Denno

This dissertation presents improved development in the formation of a generalized transmission loss (B)-matrix for a multiarea grid power system. In the procedure, the individual tie powers of each area are replaced by the net interchange, sneak and circulating powers. The latter two variables are directly eliminated in the power reference frame using actual impedances, unlike current methods that require the elimination of sneak and circulating currents, the formation of complex tie current model and the complex tie power model. Consequently, manipulation of large complex current, power and impedance matrices is avoided reducing both computer time and memory requirement. Further, the procedure not only provides a model for predicting individual tie powers, given generator and net interchange powers, but also provides coefficients that reflect the changes in the tie power flows with respect to the changes in generator and net interchange flows.

Blank Page

The dissertation also presents a modified pool lambda dispatch method that could be used on-line for optimal coordination of generating sources in a multiarea grid power system. The classical fuel cost minimization problem is modified with the addition of a constraint equation that forms the basis for the definition of a common pool reference running cost. The solution algorithm is in a closed form rather than iterative and explicitly provides the individual area running costs in terms of the pool reference cost and the desired generation of each area. Thus, individual areas can be dispatched in a multiarea grid power system in the same manner as individual generators are dispatched in a single area.

Finally, a procedural method of selecting and designing an acceptable optimum power system configuration from a group of system alternatives, in terms of a generalized conductance (G)-matrix is presented. Analysis of an arbitrary N area power system by the method presented herein can be very economical, since the dimension (2N-1)X(2N-1) of the (G)-matrix is substantially smaller than the actual network. Once optimal (G)-matrix is identified, the actual network in reference frame one, can be designed by a reverse transformation, reflecting the constraints set by members of the power pool.

To my father, Chhotabhai S. Patel, whose memory has been a source of perpetual inspiration.

ACKNOWLEDGEMENTS

The author wishes to express his sincere and grateful appreciation to his advisor and research director, Dr. Khalil Denno, who provided many valuable suggestions, continuous guidance and encouragement throughout the course of the entire research.

The author wishes also to express his sincere appreciation to Dr. Andrew Meyer, Dr. Edwin Cohen, Dr. John Rausen and Dr. Elliot Farber, who have kindly read through the original manuscript and provided valuable suggestions.

Special acknowledgement is due to Commissioner Joel R. Jacobson and Assistant Commissioner Charles Richman of the New Jersey Department of Energy for supporting the research presented here in all of its aspects, and Public Service Electric and Gas Company for making available the data for the test system used in this research.

The author would also like to thank William Barretti, Ronald Reisman and Riaz Shaikh of the Department of Energy for their helpful comments in reviewing the text. Sincere thanks is due to Joan Delli Santi for her excellent work in typing and general preparation of the manuscript. Last, but

certainly not least, the author expresses his sincere indebtedness to Surbhiben C. Patel, his mother; Taru B. Patel, his wife; Ratna B. Patel, his daughter; and Ashish B. Patel, his son, for their constant encouragement and patience which has enabled him to accomplish his research goals.

TABLE OF CONTENTS

Chapter Page

LIST OF TABLES

LIST OF FIGURES

CHAPTER 1

INTRODUCTION

The problem of economic dispatch originated sixty or more years ago when engineers were concerned with the allocation of generation between two or more available generating units to meet the system load (Davison, 1922; Wilston, 1928). During the 1920's (Stahl, 1930, 1931), two methods were essentially in use: 1) "the base load method," where the most efficient unit was loaded to its maximum capability, followed by the loading of the next efficient unit and 2) "the best point loading method," where the units were successively loaded to their lowest heat rate point, beginning with the most efficient unit and working down to the least efficient unit.

In the late 1920's, the concept of incremental loading was postulated. It was found that the most economic results are obtained when the next increment in load is picked up by the unit whose incremental cost is the lowest. By 1931, it was established (Estrada, 1930; Hahn, 1931) that for economic operations incremental cost of all machines should be equal, a fundamental principle which still applies today. A formal proof that equal incremental loading for two generators would result in a minimum (dollar per hour) input was given by Steinberg and Smith (1934). For any desired total generation ($P_T = P_1 + P_2$) it was shown that

$$\frac{dF_1}{dP_1} = \frac{dF_2}{dP_2} \tag{1.1}$$

gave the best operating point in terms of fuel input. It should be noted that the only variables considered were the generator powers. The presence of transmission network and the resultant losses were ignored.

In 1943 the publication of the concepts, construction and use of loss formula by E. E. George marked a significant breakthrough in the computation of transmission losses. With the use of network analyzers, the incremental fuel costs were combined with the incremental transmission losses. G. Kron (1951, 1952), in a series of four papers entitled "Tensorial Analysis of Integrated Transmission Systems," presented a concise derivation of the electrical network and loss modelling; the first two parts considered losses in a single area, and the latter two parts considered losses in interconnected areas. The presentation was well structured and clearly provided the effects of the following major assumptions:

1) Each load current remains a constant complex ratio of the total load current irrespective of load level.
2) The VAR to WATT ratio of all generators and of the ties remain constant.
3) The deviations of generator voltages and angles from those incorporated in the loss formula are small.

Practical application of Kron's work was undertaken by Kirchmayer and Stagg (1951) which resulted in improved loss formula calculating procedures and, later, in computer programs. Kirch-

mayer and Stagg (1952) also derived what is now known as the classic coordination equations, which are used to this day.

$$\frac{dF_n}{dP_n} + \lambda \frac{\partial P_L}{\partial P_n} = \lambda \quad ; n = 1,2,... \tag{1.2}$$

where F_n represents the input to generator n in \$/hr., P_n represents the output of generator n in megawatts, P_L represents the total transmission loss in megawatts and λ represents the incremental cost of received power in \$/Mwhr.

The concepts of single area were then extended to multiarea systems. The use of individual area loss formulae or the B-matrices as they are commonly known for multiarea systems was presented in 1952 (Kron; Glimn, Kirchmayer and Stagg). This allowed the individual areas to retain their own load split inherent in their own loss formula rather than to require a new assumption that loads of all areas remain a constant complex ratio of the entire load. Each area loss model is a square matrix and is of the order equal to the number of generators contained in the area plus the number of ties that connect the area to the rest of the system.

Since the individual tie powers are generally not known, Kron suggested a series of transformations, which essentially interconnect the individual B-matrices and eliminate the tie powers as variables in terms of new variables representing the net interchange of the individual areas. With the resolution of the multiarea network loss

problem, Kerr and Kirchmayer (1959) extended the derivation of the coordination equations to the multiarea case. Further extension of Kron's work was done by Happ (1971, 1975) in developing a unique complex tie current model:

$$I^{Tm} = AI^{Gn} + BI^{Ek} + K \tag{1.3}$$

where I^{Tm} represents the resulting tie currents, I^{Gn} the generator and load currents of individual areas and I^{Ek} the net interchange currents of the (N-1) areas of the N-area system.

The complex tie powers are obtained from the complex tie power model:

$$P^{Tm} = CP^{Gn} + DP^{Ek} + F \tag{1.4}$$

where P^{Tm} are the resulting tie powers, P^{Gn} the generator and load currents of individual areas and P^{Ek} the net interchange powers of all but one, the reference area.

The tie models facilitate the rapid calculations of tie currents and tie power flows within the areas of a pool as well as areas ouside the pool. The following represents some of the applications of such models:

1. Tie line flow determinations can be made a) for proposed or future pool-to-pool or pool-to-external area transactions in conjunction with the costing of contracts, and b) for after the fact costing of contracts.

2. All tie line flows may be computed for a system condition that would exist were the pool members not to have operated as a pool, in conjunction with after the fact costing of pool operation.
3. All tie line flows may be computed for an interchange from one external area to another, so that the wheeling losses incurred in the areas of the pool can be determined.
4. Classic pool dispatch on a multiarea basis requires models of the individual areas of the pool and the tie model.
5. The interarea matrix can be used for evaluating contingencies and in logic for relieving overloaded lines during normal or contingency conditions.

As the size of power systems increased, the importance of coordinating dispatch of power among available generating sources within individual areas and among the areas became more critical and sensitive. By the early 1960's (Happ, 1974), the following three methods were well established for dispatching power in a multiarea system: 1) the pool boundary cost iteration method, 2) the pool lambda method, and 3) the pool base point and participation method.

The pool boundary cost iteration method is based on obtaining total solutions for a set of inequalities involving individual area costs. In the solution algorithm the power system itself is

a part of the iteration process. This procedure inherently delays the solution, with little control to speed up the process.

The pool lambda ratio method is based on a penalty factor type vector made up of ratios between all but one of the area running costs and the remaining area, the reference running cost. These ratios must be obtained before the generation of the entire power pool is in balance economically. This entails the immediate availability of the generalized B-matrix at the central computer, where the control will perform periodic dispatch calculations for the entire power pool in order to obtain desired lambda ratios.

The pool base point and participation factor method involves the calculation at intervals of a complete economic dispatch for the entire power pool to yield a reference amount of generation, the base point, for each area. In the intervals between the calculation of these base points, changes in total system generation are allocated to individual areas according to participation factors which have also been previously calculated.

As noted, methods 2 and 3 involve periodic, but nonetheless off-line, calculations of detailed dispatch for the entire power pool from which constant factors are obtained for continuous on-line dispatch until the next overall dispatch calculation is made. The more frequently this calculation is made, the greater the penalty in computer usage for essentially redundant calculations; the less frequently this calculation is made, the greater the

accumulated inaccuracy during the interval. This inaccuracy can be considerably greater than that due to the intervening change in load level. Further, method 2 involves an on-line integration of the pool control error to produce the pool lambda that will satisfy the total pool constraint and reduce the pool control error to zero. Experience has shown that this technique is impractical. Due to the low incremental cost and large size of most new units, system effective incremental cost curves are characterized by flat sections covering large blocks of energy combined with much steeper sections toward the upper end of the curve. At the same time, most steam units respond sluggishly at best to running cost signals. This combination of circumstances makes it all but impossible to arrive at a proper calibration of the on-line integrator and the reset action. In addition, the presumed system control lambda can rapidly become so inaccurate as to be unusable.

The increasing concern over selecting an appropriate technique for the economic dispatch of power among interconnected areas brought problems of new dimensions in the early 1970's. The impact of the Arab oil embargo and the emergence of new technologies raised critical questions with respect to the design of power system networks. As previously indicated, electrical power systems are generally represented in conventional form in terms of data related to actual generating sources, loads

and impedances of the interconnected network, which G. Kron gave the now commonly known name of the first reference frame. On the other hand, engineers in a single power area and multiarea power pool usually deal with the real power of the generating sources and real power exchange.

System representation in the power or the sixth reference frame generally results in a much smaller equivalent network than the actual network due to the fact that in the sixth reference frame the system load buses are generally eliminated. Thus, where prompt and decisive action is needed in comparing several power systems of different configurations under a unified constraint, it is advisable that those systems are expressed and identified in an overall power equivalent reference frame. This is because a comparison and analysis from the start of several power system alternatives in the actual first reference frame requires excessive computer time as well as large memory capacity to absorb all the data.

In 1977, K. Denno developed a criterion by which power system optimization in the power flow reference frame can be carried out using the B-matrix, power source outputs within their maximum ranges and fuel cost data. Such a criterion was successfully demonstrated on a single area system in terms of symmetrical resistance matrix. The knowledge of the resistance matrices of more than one interconnected network could serve as

the basis for identifying the nature and type of the power system, i.e. whether it is a centralized system, a dispersed system or a mixed centralized-dispersed system as far as the locations of the power generating sources are concerned. Once an optimum R-matrix is identified based on constraints set by the power pool through reverse transformation, the actual network in reference frame one can be obtained for design purposes.

CHAPTER 2

STATEMENT OF THE PROBLEM

In a multiarea grid power system, the economic dispatch of power among the various areas necessitates the knowledge of individual area transmission loss matrices or the B-matrices. However, such B-matrices can be used only where both the individual area tie flows and the area generator flows are known. Generally, the area tie flows are neither known nor controllable. What is known and is controllable is the net interchange leaving each area. Therefore, it is necessary to express the individual area tie flows in terms of the net interchange and generator flows. However, in doing so additional variables, such as the circulating and sneak variables, are introduced. Such variables can be rigorously eliminated in the current reference frame, although such a procedure involves the manipulation of complex current and impedance matrices, which for a multiarea grid power system with a multiplicity of tie lines increases both computer time and memory requirement for solution. On the other hand, elimination of circulating variables in the power reference frame gives approximate results, but again only for systems with equal X/R ratios (Glimn, 1952). Thus, the first objective of this research is to develop an improved method of modelling tie powers in an interconnected multiarea grid power system that does not require the elimination of circulating currents. It is required that the tie power model be obtained

by eliminating the circulating and sneak flows directly in the power reference frame using actual impedances and connection matrices, thereby avoiding the process of manipulating large complex current and impedance matrices with a concomitant reduction in both computer time and memory requirement.

In view of the deficiencies of existing dispatch techniques, at least from the standpoint of operating procedures, there is considerable benefit to be derived from formulating a new technique that would reduce the overall computational burden (Fink, 1970, 1971). The objective is to develop a solution algorithm that is in a closed form rather than iterative so that the computational burden is shared equally and without duplication between the central pool computer and the individual area computers, direct control of generation is retained at the area level, and severe variations in the slope of the effective pool cost curve will not adversely affect the solution.

Further, the improvement in tie line modelling must be coupled with an improvement in existing procedures of interconnecting individual area B-matrices so as to form a generalized B-matrix that can be used for economic dispatch of power among the various interconnected areas and for optimum selection and design of a power system.

Additionally, the procedural method of selecting and designing an acceptable optimum power system configuration from

a group of system alternatives for a multiarea grid power system must be extended and improved. It is imperative that the design criterion developed for a multiarea system be in terms of a hypothetical conductance matrix, the elements of which reflect the treatment of areas as a whole, thereby further reducing the size of the equivalent system than heretofore attempted.

Finally, the theories established in this research must be demonstrated on the four area multiarea grid power system depicted by Fig. 2.1. Table 2.1 shows the total number of buses of each area, and the number of generator, tie and load buses. Table 2.2 shows the number of ties between any two interconnected areas.

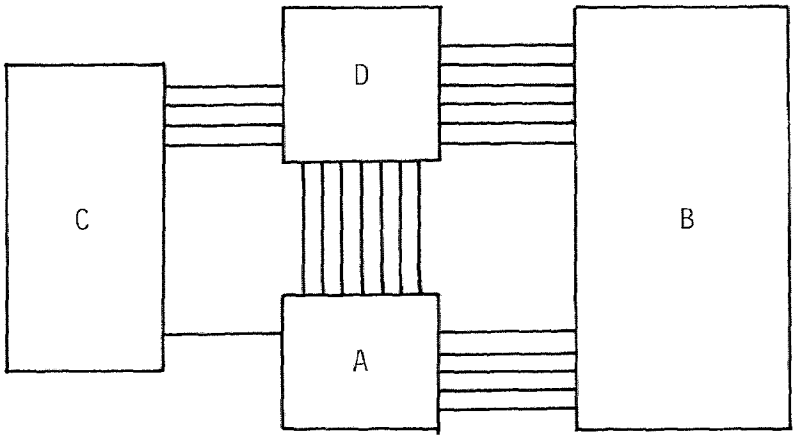

Fig. 2.1 Multiarea Grid Power System

Table 2.1 Summary of Bus Data

	Number of Buses			
	Total	Generator	Tie	Load
Area A	31	3	13	15
Area B	39	8	11	20
Area C	23	8	5	10
Area D	101	18	17	66

Table 2.2 Tie Data Between Adjacent Areas

Between Area and Area		Number of Ties
A	B	5
A	C	1
A	D	7
B	D	6
C	D	4

CHAPTER 3

AREA NETWORK MODELS

A multiarea grid power system consists of a number of interconnected electric utilities referred to as pool members or areas that coordinate their operations to improve reliability and produce an optimal allocation of generation. The assessment of reliability and economic allocation of generation requires representation of the system by mathematical models. In this chapter, the two basic models that form the foundation of the research to be presented in Chapters 4 through 7 will be discussed briefly. These are 1) the area impedance model and 2) the transmission loss model.

3.1 Area Impedance Model

An electric utility or an area consists of various generating sources connected by an arbitrary transmission network to the individual loads as indicated in Fig. 3.1.

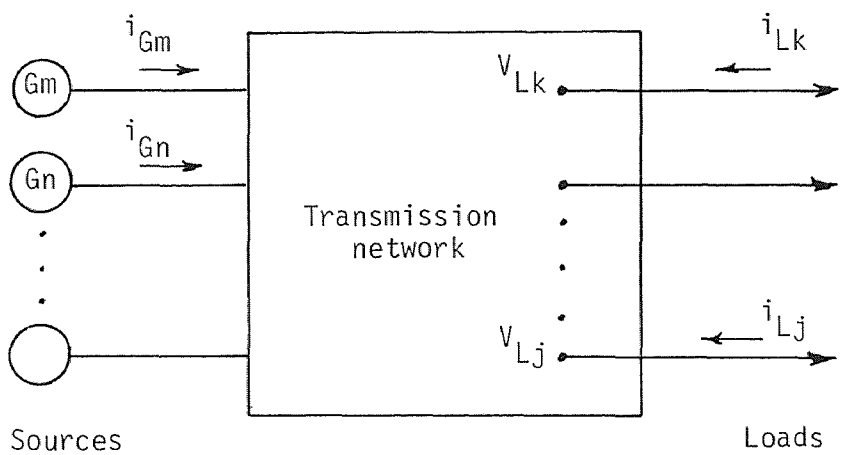

Fig. 3.1 Schematic Diagram of a Power System

If any given point in the transmission network is chosen as a reference point as shown in Fig. 3.2, the following set of equations may be written in terms of all the generator and load self and mutual impedances with respect to the reference point.

$$\begin{array}{c} Gm \\ \\ Lj \end{array} \begin{bmatrix} V_{Gm}-V_R \\ \\ V_{Lj}-V_R \end{bmatrix} = \begin{bmatrix} Z_{Gm-Gn} & Z_{Gm-Lk} \\ \\ Z_{Lj-Gn} & Z_{Lj-Lk} \end{bmatrix} \begin{bmatrix} i_{Gn} \\ \\ i_{Lk} \end{bmatrix} \tag{3.1}$$

where m,n = number of sources

j,k = number of loads

G. Kron called these reference frame 1.0 equations. They can be denoted as:

$$V_{1.0} = Z_{1.0-1.0}\, I^{1.0} \tag{3.2}$$

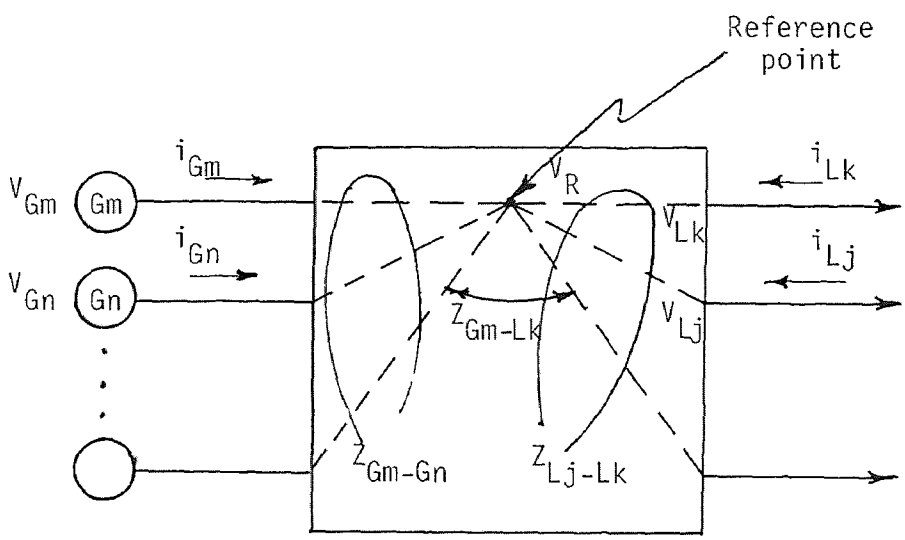

Fig. 3.2 Self and Mutual Impedances for Transmission Network

The impedances designated by Z_{Gm-Gn} represent the self and mutual impedances between the generators. The term Z_{Lj-Lk} represents the self and mutual impedances between the loads, and the terms Z_{Gm-Lk} and Z_{Lj-Gn} represent the mutual impedances between the generators and the loads. The equivalent load current i_{Lk} at bus K is defined as the sum of the line-charging, synchronous condenser and load current at that bus. The $Z_{1.0-1.0}$ matrix in Eq. (3.2)is generally referred to as the bus impedance matrix. The matrices $V_{1.0}$ and $I^{1.0}$ represent the voltages and currents in reference frame 1.0. The computer algorithm to obtain the bus impedance matrix directly from the system parameters and coded bus numbers is given in Appendix I.

Since the load currents at the various load buses are generally not known, it is necessary to eliminate such variables in terms of the generator currents that are generally known. The elimination of such variables in essence involves the transformation of a given set of variables to a new set of variables. These transformations are made by means of transformation matrices which result in logical and systematic steps in the analysis. The concept of transformation matrix C, allowing a given circuit to be modified to a new hypothetical circuit such that the power input remained invariant, was first shown by G. Kron. As shown in Appendix II, if a set of currents i_{old}

pertaining to the old circuit are related to the new currents i_{new} by a transformation matrix C such that

$$i_{old} = C\ i_{new} \tag{3.3}$$

and if power is to remain invariant, the new set of voltages is given by:

$$v_{new} = C_t^* \ v_{old} \tag{3.4}$$

and the new set of impedances is given by:

$$Z_{new} = C_t^* \ Z_{old}\ C \tag{3.5}$$

Kirchmayer, in his development of transmission loss formula, assumed that each equivalent load current remains a constant complex fraction of the total equivalent load current.

If $$i_L = \sum_j i_{Lj} \tag{3.6}$$

where i_L represents the total equivalent load current. The individual equivalent load currents can be expressed as,

$$i_{Lj} = l_j\ i_L \tag{3.7}$$

where l_j represents the fraction of the equivalent load current at bus j to the total equivalent load current. It is now possible to replace the reference frame 1.0 currents by a set of new currents in a new reference frame called 2.0. The matrix of transformation $C_{2.0}^{1.0}$ is given by:

$$\begin{matrix} Gn \\ \\ Lk \end{matrix} \begin{bmatrix} i_{Gn} \\ \\ i_{Lk} \end{bmatrix} = \begin{bmatrix} 1 & 0 \\ \\ 0 & l_k \end{bmatrix} \begin{bmatrix} i_{Gn} \\ \\ i_L \end{bmatrix} \tag{3.8}$$

where,

$$C^{1.0}_{2.0} = \begin{bmatrix} 1 & 0 \\ 0 & 1_k \end{bmatrix}$$

The bus impedance equation in reference frame 2.0 is given by:

$$\begin{matrix} Gm \\ L \end{matrix} \begin{bmatrix} V_{Gm}-V_R \\ V_L-V_R \end{bmatrix} = \begin{bmatrix} Z_{Gm-Gn} & a_m \\ b_n & w \end{bmatrix} \begin{bmatrix} i_{Gn} \\ i_L \end{bmatrix} \tag{3.9}$$

where,

$$\begin{aligned} a_m &= Z_{Gm-Lk}\ 1_K \\ b_n &= 1_j^*\ Z_{Lj-Gn} \\ w &= 1_j^*\ Z_{Lj-Lk}\ 1_K \\ V_L &= 1_j^*\ V_{Lj} \end{aligned} \tag{3.10}$$

The above transformation changes the circuit of Fig. 3.2 to the circuit given by Fig. 3.3. The load point L does not exist in the actual network, and so it is referred to as a hypothetical load point.

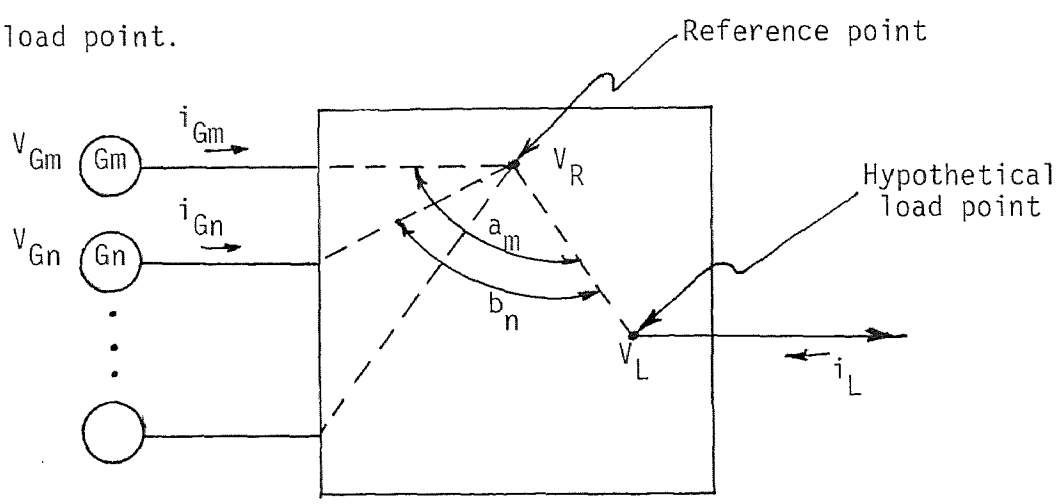

Fig. 3.3 Power System Representation in Reference Frame 2.0

Kirchmayer transformed the bus impedance equation of power reference frame 2.0 to power reference frame 3.0 by eliminating the total load current i_L as a variable, using the relationship that the summation of source currents must be equal and opposite to the summation of load currents.

$$\sum_n i_{Gn} = i_L \tag{3.11}$$

The resulting bus impedance equation was:

$$\left[V_{Gm}-V_L\right] = \left[Z_{Gm-Gn}-a_m-b_n+w\right] \left[i_{Gn}\right] \tag{3.12}$$

or

$$\left[V_{Gm}-V_L\right] = \left[Z_{m-n}\right] \left[i_{Gn}\right] \tag{3.13}$$

Fig. 3.4 shows the circuit of power reference frame 3.0 so obtained.

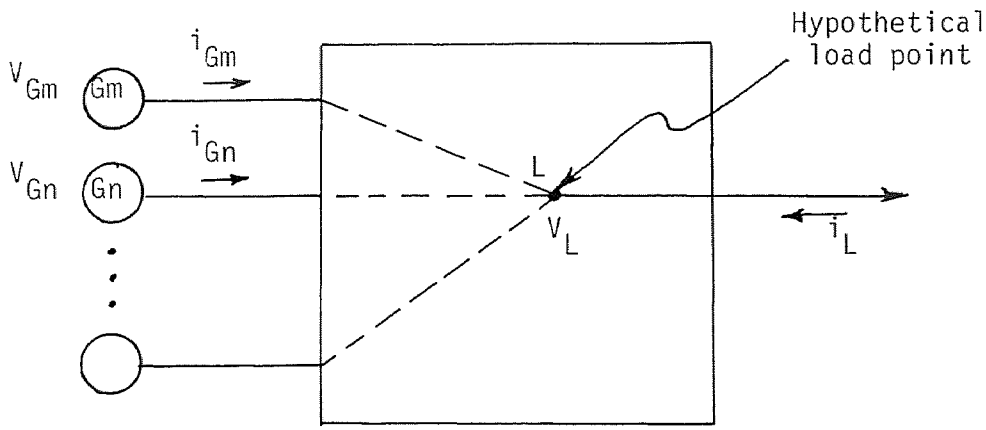

Fig. 3.4 Power System Representation in Reference Frame 3.0

In the development of a transmission loss formula for a multiarea grid power system, Eq. (3.13) should be modified to

reflect the presence of tie lines that interconnect the various areas. The theory to be developed herein does not place any restriction on the number of ties between the areas or even on the number of the areas of the pool. In other words, the power pool could consist of a number of areas each having a number of tie lines. For each area the total load current i_L can be eliminated as a variable by the relationship that the summation of load currents is equal and opposite to the sum of the summation of source currents and tie currents:

$$i_L = -\left(\sum_n i_{Gn} + \sum_n i_{Tn}\right) \tag{3.14}$$

The bus impedance equation in reference frame 2.0 can now be written as:

$$\begin{bmatrix} V_{Gm}-V_R \\ V_{Tm}-V_R \\ V_L-V_R \end{bmatrix} = \begin{bmatrix} Z_{Gm-Gn} & Z_{Gm-Tn} & a_{Gm} \\ Z_{Tm-Gn} & Z_{Tm-Tn} & a_{Tm} \\ b_{Gn} & b_{Tn} & w \end{bmatrix} \begin{bmatrix} i_{Gn} \\ i_{Tn} \\ i_L \end{bmatrix} \tag{3.15}$$

The current vector in reference frame 2.0 becomes,

$$i_{old} = \begin{bmatrix} i_{Gn} \\ i_{Tn} \\ i_L \end{bmatrix} \tag{3.16}$$

By representing the load current as the sum of source and tie currents as shown by Eq. (3.14) the relationship between new and old currents can be written as,

$$i_{Gn} = i_{Gn}$$
$$i_{Tn} = i_{Tn} \tag{3.17}$$
$$i_L = -i_{Gn} - i_{Tn}$$

Eq. (3.17) can be written in a matrix form as,

$$\begin{bmatrix} i_{Gn} \\ i_{Tn} \\ i_L \end{bmatrix} = \begin{bmatrix} 1 & 0 \\ 0 & 1 \\ -1 & -1 \end{bmatrix} \begin{bmatrix} i_{Gn} \\ \\ i_{Tn} \end{bmatrix} \tag{3.18}$$

where the currents $I^{2.0}$ of the reference frame 2.0 are related to the currents $I^{3.0}$ of reference frame 3.0 by the matrix of transformation $C_{3.0}^{2.0}$,

$$C_{3.0}^{2.0} = \begin{bmatrix} 1 & 0 \\ 0 & 1 \\ -1 & -1 \end{bmatrix} \tag{3.19}$$

The new voltages in reference frame 3.0 are:

$$\begin{bmatrix} V_{Gm}-V_L \\ V_{Tm}-V_L \end{bmatrix} = \begin{bmatrix} 1 & 0 & -1 \\ 0 & 1 & -1 \end{bmatrix} \begin{bmatrix} V_{Gm}-V_R \\ V_{Tm}-V_R \\ V_L-V_R \end{bmatrix} \tag{3.20}$$

The new impedance matrix in reference frame 3.0 is given by:

$$Z_{new} = \begin{bmatrix} Z_{Gm-Gn}-b_{Gn}-a_{Gm}+w & Z_{Gm-Tn}-b_{Tn}-a_{Gm}+w \\ Z_{Tm-Gn}-b_{Gn}-a_{Tm}+w & Z_{Tm-Tn}-b_{Tn}-a_{Tm}+w \end{bmatrix} \tag{3.21}$$

From Eqs. (3.18), (3.20) and (3.21) the reference frame 3.0 bus impedance equation is given by:

$$\begin{bmatrix} V_{Gm}-V_L \\ V_{Tm}-V_L \end{bmatrix} = \begin{bmatrix} Z_{Gm-Gn}-a_{Gm}-b_{Gn}+w & Z_{Gm-Tn}-a_{Gm}-b_{Tn}+w \\ Z_{Tm-Gn}-a_{Tm}-b_{Gn}+w & Z_{Tm-Tn}-a_{Tm}-b_{Tn}+w \end{bmatrix} \begin{bmatrix} i_{Gm} \\ i_{Tm} \end{bmatrix} \quad (3.22)$$

or

$$V_{3.0} = Z_{3.0-3.0}\ I^{3.0} \quad (3.23)$$

The above equation is in terms of generator currents and ties currents since load currents have been eliminated. The impedance matrix in Eq. (3.22) is not symmetric. The asymmetry in the real part of each component results from the terms involving the products of imaginary load currents and mutual reactances between generator and tie points and the loads. The asymmetry in the imaginary part of each component results from the terms involving the products of imaginary load currents and mutual resistances between generator and tie points and the loads.

Eq. (3.22) is generic in nature. In a compounded form it can be written as

$$\begin{bmatrix} V_G-V_L \\ V_T-V_L \end{bmatrix} = \begin{bmatrix} Z1 & Z2 \\ Z3 & Z4 \end{bmatrix} \begin{bmatrix} I^G \\ I^T \end{bmatrix} \quad (3.24)$$

where,

$$Z1 = Z_{Gm-Gn}-a_{Gm}-b_{Gn}+w$$

$$Z2 = Z_{Gm-Tn}-a_{Gm}-b_{Tn}+w$$

$$Z3 = Z_{Tm-Gn}-a_{Tm}-b_{Gn}+w$$

$$Z4 = Z_{Tm-Tn}-a_{Tm}-b_{Tn}+w$$

$$V_G = V_{Gm} \tag{3.25}$$

$$V_T = V_{Tm}$$

$$I^G = i_{Gm}$$

$$I^T = i_{Tm}$$

For an N area multiarea system we can write N such sets of equations. For area A we can write:

$$\begin{bmatrix} V_{GA}-V_{LA} \\ V_{TA}-V_{LA} \end{bmatrix} = \begin{bmatrix} Z1^A & Z2^A \\ Z3^A & Z4^A \end{bmatrix} \begin{bmatrix} I^{GA} \\ I^{TA} \end{bmatrix}$$

$$\vdots$$

Similarly, for the Nth area we can write

$$\begin{bmatrix} V_{GN}-V_{LN} \\ V_{TN}-V_{LN} \end{bmatrix} = \begin{bmatrix} Z1^N & Z2^N \\ Z3^N & Z4^N \end{bmatrix} \begin{bmatrix} I^{GN} \\ I^{TN} \end{bmatrix} \tag{3.26}$$

3.2 Area Transmission Loss Model

The area transmission loss model or the B-matrix can be obtained by the traditional approach of Kirchmayer (1958), using the reference 3.0 impedances given by Eq. (3.21) and the following assumptions:

1. That the generator-bus voltage magnitudes remain constant.
2. That the generator-bus angles remain constant.
3. That the source reactive power may be approximated by the sum of a component which varies with the system load and a component which varies with the source output.

The transmission loss L may be expressed by:

$$L = \sum_m \sum_n P_m B_{mn} P_n \tag{3.27}$$

where B_{mn} = coefficients of the loss model

P_m, P_n = generator and tie powers

The loss model coefficients B_{mn} represent an equivalent loss network shown by Fig. 3.5, through which the generator and tie powers flow in supplying the overall system load.

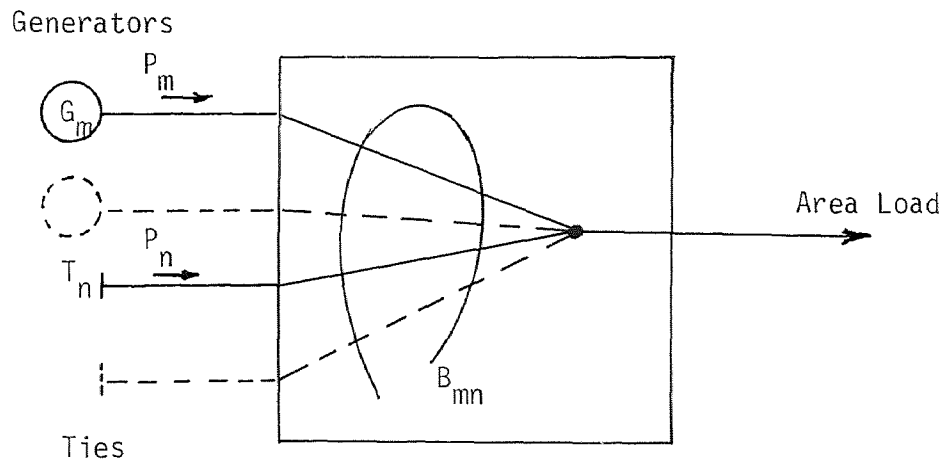

Fig. 3.5 Power System Representation in Reference Frame 6.0

Kirchmayer (1958) has shown that the B_{mn} coefficients can be obtained from the following expression.

$$B_{mn} = K_{mn} R_{m-n} - H_{mn}(f_m - f_n) \tag{3.28}$$

where,

$$K_{mn} = \frac{1}{V_m V_n}\left[(1 + s_m s_n)\cos\theta_{mn} + (s_m - s_n)\sin\theta_{mn}\right] \tag{3.29}$$

$$H_{mn} = \frac{1}{V_m V_n}\left[(1 + s_m s_n) \sin \theta_{mn} + (s_n - s_m) \cos \theta_{mn}\right] \qquad (3.30)$$

V_m = absolute value of the voltage of generator or tie bus m

θ_{mn} = difference in angle between buses m and n

s_m = ratio of the reactive (Q) to the real (P) power at bus m

R_{m-n} = reference frame 3 symmetrical resistance between buses m and n

$f_m = R_{Gm-Lk}\ I_k''$

I_k'' = imaginary part of I_k, the ratio of the load current at bus k to the total load current

The B-matrix in a generic compounded form can be expressed as

$$B = \begin{array}{cc} \begin{bmatrix} B1 & B2 \\ B3 & B4 \end{bmatrix} & \begin{array}{c} G \\ T \end{array} \end{array} \qquad (3.31)$$

where G represents the generator axis and T represents the tie axis.

For area A the B-matrix can be written as

$$B^A = \begin{array}{cc} \begin{bmatrix} B1^A & B2^A \\ B3^A & B4^A \end{bmatrix} & \begin{array}{c} GA \\ TA \end{array} \end{array}$$

and similarly the B-matrix for the Nth area can be written as

$$B^N = \begin{array}{cc} \begin{bmatrix} B1^N & B2^N \\ B3^N & B4^N \end{bmatrix} & \begin{array}{c} GN \\ TN \end{array} \end{array} \qquad (3.32)$$

3.3 Area Loss Factors

In the economic dispatch of power, it is necessary to determine the change of transmission loss in an area with respect to the change in both the generator and tie power flows of the area. Differentiating the total transmission loss given by Eq. (3.27) separately with respect to the generator powers and the tie powers, we have

$$\frac{\partial L_i}{\partial P_m^{Gi}} = 2 \sum_n B_{mn}^i P_n^{Gi} + 2 \sum_k B_{mk}^i P_k^{Ti} \tag{3.33}$$

$$\frac{\partial L_i}{\partial P_m^{Ti}} = 2 \sum_n B_{mn}^i P_n^{Gi} + 2 \sum_k B_{mk}^i P_k^{Ti} \tag{3.34}$$

where

$n = 1,2....NG_i$

$k = 1,2....NT_i$

NG_i = Total number of generators in the area i

NT_i = Total number of ties in the area i

P_m^{Gi} = Generator power input at bus m of area i

P_m^{Ti} = Tie power input at bus m of area i

The quantities making up the righthand side of Eqs. (3.33) and (3.34) can be obtained for different load conditions. Expressing such quantities as constants within a narrow bandwidth of the system load conditions at which such quantities are determined we have,

$$\frac{\partial L_i}{\partial P_m^{Gi}} = \alpha_m^i \tag{3.35}$$

and

$$\frac{\partial L_i}{\partial P_m^{Ti}} = \beta_m^i \tag{3.36}$$

3.4 Practical Determination of Area Loss Models

For the four area grid power system the B-matrices obtained at 100, 80, 65 and 40% load conditions are given in Appendix III, Tables III.2, III.3, III.4 and III.5 for areas A, B, C and D respectively. Figure 3.6 shows the computer flow diagram used for the calculation of the loss model coefficients. The B-matrices obtained had dimensions 16X16, 19X19, 13X13 and 35X35 for areas A, B, C and D respectively.

3.5 Practical Determination of Area Transmission Losses

The total transmission loss in each area in megawatts using Eq. (3.27) for 100, 80, 65 and 40% load conditions is given by Table 3.1. The actual loss at the same load conditions by computing the I^2R loss of each transmission line is given by Table 3.2.

3.6 Practical Determination of Area Loss Factors

The area loss factors α and β obtained at 100, 80, 65 and 40% load conditions are given by Tables 3.3, 3.4, 3.5 and 3.6 for areas A, B, C and D respectively.

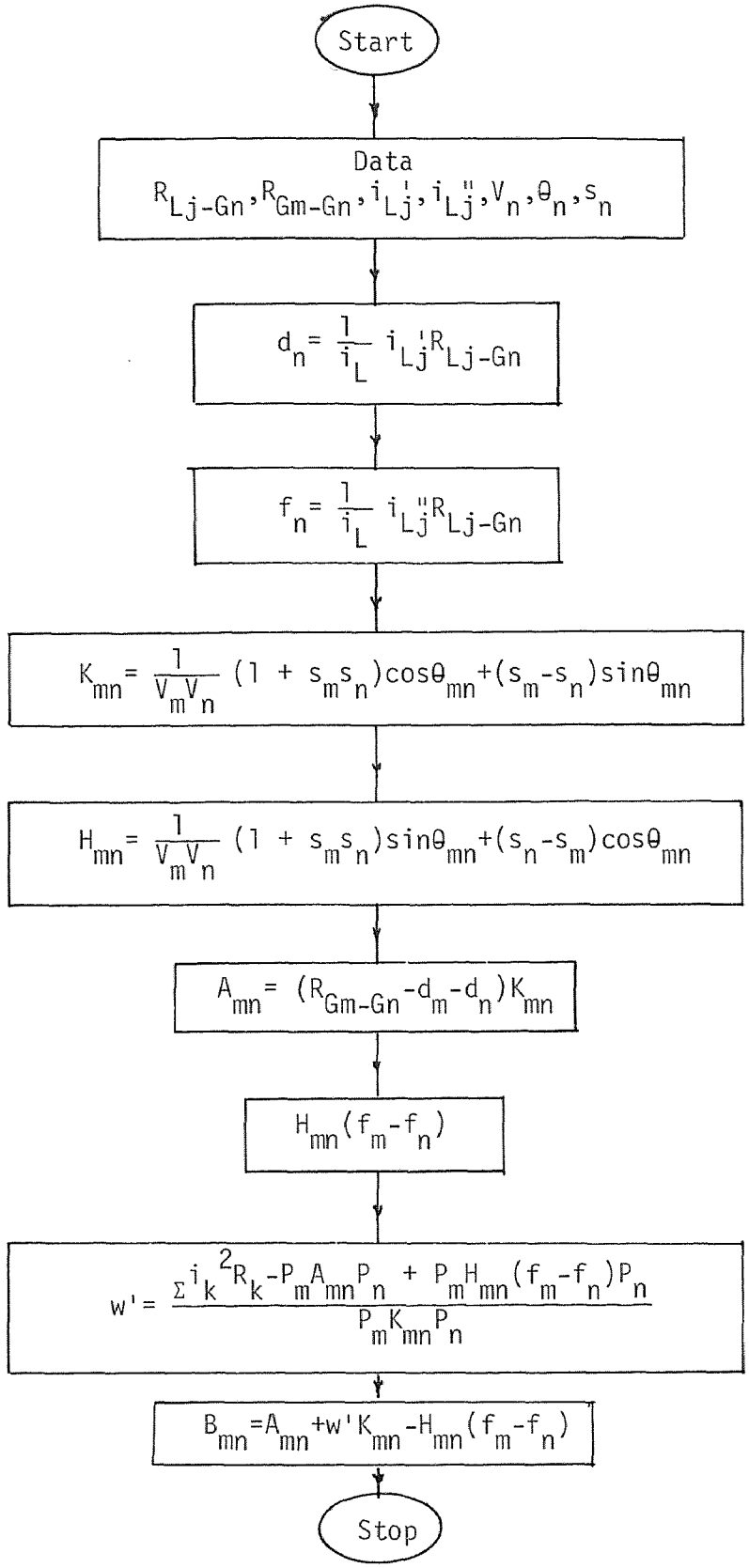

Fig. 3.6 Computer Flow Diagram for the Determination of Area Loss Model Coefficients

Table 3.1 Total Transmission Loss Obtained from Transmission Loss Models

Area	Percent Load 100	80	65	40
A	97.20	96.05	96.12	98.21
B	32.62	26.26	15.72	26.93
C	19.96	15.87	17.69	8.03
D	73.00	47.41	32.39	22.60

Table 3.2 Total Transmission Loss Obtained from I^2R Load Flow Studies

Area	Percent Load 100	80	65	40
A	97.54	96.01	96.14	98.20
B	32.65	26.28	15.71	26.92
C	19.94	15.85	17.70	8.02
D	73.11	47.45	32.38	22.60

Table 3.3 Area A Loss Factors α and β

Loss Factor	Bus	Percent Load 100	80	65	40
α	G1	.03212	.03215	.03199	.03196
α	G2	-.02296	-.02092	-.02244	-.02598
α	G3	-.02261	-.02006	-.02121	-.02463
β	T1	-.02663	-.02313	-.02355	-.02653
β	T2	-.02945	-.02703	-.02710	-.02958
β	T3	-.02379	-.02165	.02367	-.02797
β	T4	-.02450	-.02188	-.02495	-.03119
β	T5	-.01698	-.01806	-.02148	-.02212
β	T6	-.01941	-.01901	-.01923	-.01959
β	T7	-.02489	-.02509	-.02449	-.02409
β	T8	-.01969	-.01934	-.01970	-.02016
β	T9	-.00012	.00085	.00140	.00077
β	T10	.02520	.02394	.02458	.02501
β	T11	-.00808	-.00848	-.00873	-.00809
β	T12	.03393	.03400	.03397	.03352
β	T13	-.01208	-.01259	-.01141	-.01056

Table 3.4 Area B Loss Factors α and β

Loss Factor	Bus	Percent Load 100	80	65	40
α	G1	.03289	.03921	.03130	.01481
α	G2	.03183	.02237	.00941	.01442
α	G3	.04680	.03741	.01853	.02323
α	G4	.02731	.02784	.01610	.06162
α	G5	-.00152	-.00529	-.00320	-.01248
α	G6	.00030	-.00309	-.00108	-.01143
α	G7	.00091	-.00530	-.00320	-.01248
α	G8	.00788	.00970	.01425	.00577
β	T1	.04648	.04456	.03358	.02122
β	T2	.04517	.03843	.02466	.02914
β	T3	.01698	.01779	.01160	.01245
β	T4	.02927	.02953	.01889	.06602
β	T5	.02840	.02864	.01732	.06359
β	T6	-.00304	-.00581	-.00474	-.01456
β	T7	-.01917	-.01603	-.01287	.04194
β	T8	-.00115	-.00395	-.00262	-.01215
β	T9	-.00171	-.00231	-.00258	.00381
β	T10	-.00418	-.00207	-.00334	.00039
β	T11	-.00176	-.00229	-.00245	-.01548

Table 3.5 Area C Loss Factors α and β

Loss Factor	Bus	Percent Load 100	80	65	40
α	G1	.05962	.04126	.05285	.03911
α	G2	.05590	.03419	.04576	.03503
α	G3	.03200	.01422	.01431	.01597
α	G4	.03016	.01504	.02604	.02155
α	G5	.02225	-.00362	-.00227	-.00744
α	G6	.03217	-.10917	-.07503	-.03948
α	G7	.02154	.03899	.03279	.00653
α	G8	-.05367	-.01839	-.03432	-.02542
β	T1	-.05594	-.02003	-.03731	-.02923
β	T2	-.05484	-.01905	-.03473	-.02516
β	T3	-.03480	-.00200	-.01502	-.00750
β	T4	-.07561	-.03624	-.05186	-.03987
β	T5	-.07075	-.03143	-.04667	-.03448

Table 3.6 Area D Loss Factors α and β

Loss Factor	Bus	Percent Load 100	80	65	40
α	G1	.02147	.01405	.00914	.00778
α	G2	.01278	-.00650	-.02455	-.02217
α	G3	.01698	-.00604	-.02297	-.02167
α	G4	.01154	.00828	.02476	.02184
α	G5	.03732	.03038	.02031	.01653
α	G6	.03806	.03141	.01796	.01297
α	G7	.03516	.02693	.01774	.01519
α	G8	-.01523	-.03249	-.04041	-.03266
α	G9	.02255	.01546	.01259	.00155
α	G10	.02139	.01566	.01393	.00210
α	G11	.01842	.01743	.01572	.00169
α	G12	.02177	.01517	.01250	.00140
α	G13	.02044	.01826	.01743	.00327
α	G14	.01546	.01444	.01393	-.00016
α	G15	.01990	.01936	.02042	.00236
α	G16	.01339	.01423	.01460	.00069
α	G17	.01498	.01650	.01675	.00021
α	G18	.02368	.02216	.02176	.01081
β	T1	.03732	.03100	.02511	.02289
β	T2	-.02100	-.03674	-.04374	-.03442
β	T3	-.00497	-.02033	-.03114	-.02555

Continued Table 3.6

Loss Factor	Bus	Percent Load 100	80	65	40
β	T4	.01664	.00663	.00079	.00004
β	T5	.02934	.00869	-.00373	-.00508
β	T6	.01772	.00906	.00377	.00412
β	T7	.02039	.02084	.01843	.02421
β	T8	.02122	.01579	.01305	.01046
β	T9	.01687	.01026	.00718	.00847
β	T10	.02348	.01524	.01356	.01173
β	T11	-.00388	-.01782	-.02496	-.01831
β	T12	.02241	.01990	.01613	.00904
β	T13	.02316	.01932	.01588	.00924
β	T14	.01052	-.00762	-.01807	-.01595
β	T15	-.14821	-.11674	-.08960	-.02662
β	T16	.02159	.00212	-.00852	-.00817
β	T17	.06550	.03384	.01317	-.00166

CHAPTER 4

INTERCONNECTION OF AREA MODELS

The reference frame 3.0 individual area bus impedance matrix equations given by Eqs. (3.26) can be arranged in a single composite matrix equation representing the entire multiarea grid system. The matrix equation takes the following form:

$$\begin{bmatrix} V_{GA}-V_{LA} \\ V_{TA}-V_{LA} \\ V_{GB}-V_{LB} \\ V_{TB}-V_{LB} \\ \vdots \\ \vdots \\ V_{GN}-V_{LN} \\ V_{TN}-V_{LN} \end{bmatrix} = \begin{bmatrix} Z1^A & Z2^A & & & & & & \\ Z3^A & Z4^A & & & & & & \\ & & Z1^B & Z2^B & & & & \\ & & Z3^B & Z4^B & & & & \\ & & & & \vdots & & & \\ & & & & & \vdots & & \\ & & & & & & Z1^N & Z2^N \\ & & & & & & Z3^N & Z4^N \end{bmatrix} \begin{bmatrix} I^{GA} \\ I^{TA} \\ I^{GB} \\ I^{TB} \\ \vdots \\ \vdots \\ I^{GN} \\ I^{TN} \end{bmatrix} \quad (4.1)$$

where V_{GA}, V_{TA}, V_{GB}, V_{TB}... represents the generator and tie bus voltages of areas A, B; I^{GA}, I^{TA}, I^{GB}, I^{TB}... represents the respective bus currents. V_{LA}, V_{LB}... represents the hypothetical load center voltages of the respective areas.

Eq. (4.1) can be denoted as:

$$V_{3.0} = Z_{3.0-3.0}\, I^{3.0} \quad (4.2)$$

where

$V_{3.0}$, $Z_{3.0-3.0}$ and $I^{3.0}$ represent the reference frame 3.0 voltages, impedances and currents respectively. If the generator and tie currents in Eqs. (4.1) and (4.2) are rearranged such that the generator currents of all areas precede the tie currents of all areas, the transformation can be expressed as:

$$\begin{bmatrix} I^{GA} \\ I^{TA} \\ I^{GB} \\ I^{TB} \\ \vdots \\ \vdots \\ I^{GN} \\ I^{TN} \end{bmatrix} = \begin{bmatrix} 1 & & & & & & & \\ & & & & 1 & & & \\ & 1 & & & & & & \\ & & & & & 1 & & \\ & & \vdots & & & & & \\ & & & & & & \vdots & \\ & & & 1 & & & & \\ & & & & & & & 1 \end{bmatrix} \begin{bmatrix} I^{GA} \\ I^{GB} \\ \vdots \\ I^{GN} \\ I^{TA} \\ I^{TB} \\ \vdots \\ I^{TN} \end{bmatrix} \qquad (4.3)$$

Equation (4.3) transforms the generator and tie currents of reference frame 3.0 to a new reference frame, that will be called reference frame 3.1. The transformation equation can be denoted as:

$$I^{3.0} = C_{3.1}^{3.0} \, I^{3.1} \qquad (4.4)$$

The bus impedance equation in reference frame 3.1 takes the following form:

$$\begin{bmatrix} V_{GA}-V_{LA} \\ V_{GB}-V_{LB} \\ \vdots \\ V_{GN}-V_{LN} \\ V_{TA}-V_{LA} \\ V_{TB}-V_{LB} \\ \vdots \\ V_{TN}-V_{LN} \end{bmatrix} = \begin{bmatrix} Z1^A & & & Z2^A & & \\ & Z1^B & & & Z2^B & \\ & & \vdots & & & \vdots \\ & & Z1^N & & & Z2^N \\ Z3^A & & & Z4^A & & \\ & Z3^B & & & Z4^B & \\ & & \vdots & & & \vdots \\ & & Z3^N & & & Z4^N \end{bmatrix} \begin{bmatrix} I^{GA} \\ I^{GB} \\ \vdots \\ I^{GN} \\ I^{TA} \\ I^{TB} \\ \vdots \\ I^{TN} \end{bmatrix} \quad (4.5)$$

Equation (4.5) can be denoted as

$$V_{3.1} = Z_{3.1-3.1} \; I^{3.1} \quad (4.6)$$

Equations (4.5) and (4.6) represent the individual areas. However, they do not reflect the fact that the areas are interconnected. In order to account for the interconnection, three incidence matrices are defined.

1. A circulation matrix between two adjacent areas defining independent loops of circulating currents (cM), which flow between one tie serving as the sum tie and other remaining ties.
2. A sneak matrix defining independent loops of sneak currents (Snk) flowing around three or more areas. The sneak currents are defined to flow in the sum ties.

3. A net interchange matrix defining independent paths of interchange currents (Ek) proceeding from each area to a reference area through system interconnections. The net interchange currents are defined to flow through the sum ties.

4.1 Development of Sum and Circulation Matrices

In an N area grid power system the first step involves the identification of the areas that have a multiplicity of ties with other areas. For instance, Fig. 4.1 shows that the areas A and B are interconnected by n tie lines. For each such pair of interconnected areas, one tie is designated as the sum tie. Between the sum tie and the remaining ties, independent loops are identified through which hypothetical circulating currents are assumed to flow.

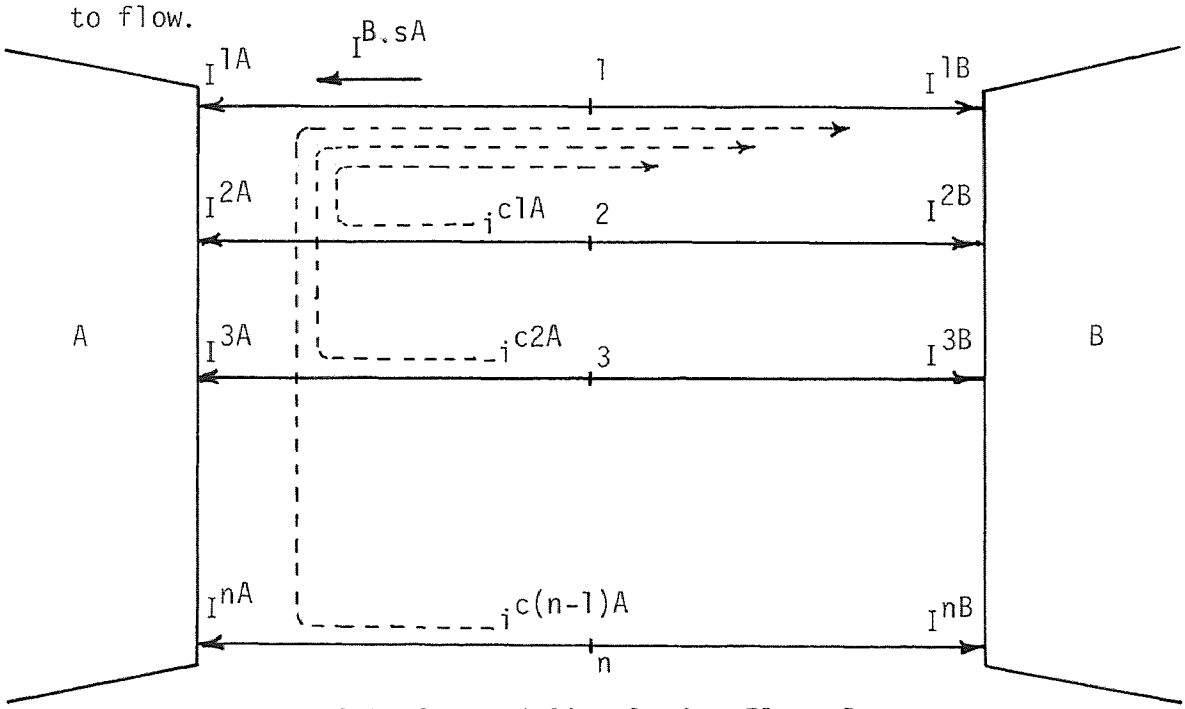

Fig. 4.1 Sum and Circulating Flows Between Two Interconnected Areas

In Fig. 4.1, 1,2... n represents the tie points. The flow of currents from the tie points towards the area is assumed positive. I^{1A}, I^{2A},...I^{nA} represents the tie currents flowing from the tie points 1,2,...n to the area A. Similarly I^{1B}, I^{2B} ...I^{nB} represents the tie currents flowing from the tie points 1,2,...n to the area B.

One of the ties can be designated as the sum tie. For instance, tie number 1 in Fig. 4.1 is designated as the sum tie through which the sum current is assumed to flow. The sum tie represents the summation of all n tie currents that flow between the two adjacent areas

$$I^{B.sA} = \sum_{n} I^{B.nA} \tag{4.7}$$

where

$I^{B.sA}$ represents the sum current flowing into area A from area B

$I^{B.nA}$ represents the tie current flowing from area B to area A through the tie bus n

Similarly

$$I^{A.sB} = \sum_{n} I^{A.nB} \tag{4.8}$$

However, the summation of currents flowing from area B to area A is negative of the summation of currents flowing from area A to area B

$$\sum_n I^{A.nB} = - \sum_n I^{B.nA} \tag{4.9}$$

or

$$I^{A.sB} = - I^{B.sA} \tag{4.10}$$

The next step involves the designation of circulating currents that flow through the remaining ties and the sum tie. Figure 4.1 shows (n-1) circulating currents flowing between the tie number 1 and the remaining ties. For instance i^{c1} is flowing in a closed loop around tie number 2 and the sum tie. The orientation of the circulating current is the same as the actual flow of the current in the tie through which the circulating current flows. The number of circulating currents plus the sum current between any two adjacent areas is exactly equal to the number of ties present between them.

Having defined the sum and circulating currents, we can express the relation between such currents and the actual tie currents. By inspection of Fig. 4.1 we can write

$$\begin{aligned} I^{B.1A} &= I^{B.sA} - i^{c1A} - i^{c2A} \ldots - i^{c(n-1)A} \\ I^{B.2A} &= i^{c1A} \\ &\vdots \\ B^{B.nA} &= i^{c(n-1)A} \end{aligned} \tag{4.11}$$

Writing the Eqs. (4.11) in a matrix form:

$$\begin{bmatrix} {}_{I}B.1A \\ {}_{I}B.2A \\ {}_{I}B.3A \\ \vdots \\ {}_{I}B.nA \end{bmatrix} = \begin{bmatrix} 1 & -1 & -1 & \vdots & -1 \\ & 1 & & & \\ & & 1 & & \\ & & & \vdots & \\ & & & & 1 \end{bmatrix} \begin{bmatrix} {}_{I}B.sA \\ {}_{i}c1A \\ {}_{i}c2A \\ \vdots \\ {}_{i}c(n-1)A \end{bmatrix} \tag{4.12}$$

In a compounded form it can be expressed as

$$\begin{bmatrix} {}_{I}B.A \end{bmatrix} = \begin{bmatrix} C^{B.A}_{s.A} & C^{B.A}_{cA} \end{bmatrix} \begin{bmatrix} {}_{I}B.sA \\ {}_{i}B.cA \end{bmatrix} \tag{4.13}$$

where

$$ {}_{I}B.A = \begin{bmatrix} {}_{I}B.1A \\ {}_{I}B.2A \\ \vdots \\ {}_{I}B.nA \end{bmatrix} \tag{4.14a}$$

$$ {}_{i}B.cA = \begin{bmatrix} {}_{i}c1A \\ {}_{i}c2A \\ \vdots \\ {}_{i}c(n-1)A \end{bmatrix} \tag{4.14b}$$

$$C_{s.A}^{B.A} = \begin{array}{c} 1A \\ 2A \\ 3A \\ : \\ nA \end{array} \begin{bmatrix} 1 \\ 0 \\ 0 \\ : \\ 0 \end{bmatrix} \tag{4.14c}$$

$$C_{cA}^{B.A} = \begin{array}{c} \\ 1A \\ 2A \\ 3A \\ 4A \\ : \\ nA \end{array} \begin{array}{c} \begin{array}{ccccc} 1A & 2A & 3A & & (n-1) \end{array} \\ \begin{bmatrix} -1 & -1 & -1 & : & -1 \\ 1 & & & & \\ & 1 & & & \\ & & 1 & & \\ & & & : & \\ & & & & 1 \end{bmatrix} \end{array} \tag{4.14d}$$

Expanding matrix Eq. (4.13) we get

$$I^{B.A} = C_{sA}^{B.A} \; I^{B.sA} + C_{cA}^{B.A} \; i^{B.cA} \tag{4.15}$$

We can write similar sets of equations for each area to which A is connected. Writing such equations

$$\begin{aligned} I^{C.A} &= C_{sA}^{C.A} \; I^{C.sA} + C_{cA}^{C.A} \; i^{C.cA} \\ &\vdots \\ I^{N.A} &= C_{sA}^{N.A} \; I^{N.sA} + C_{cA}^{N.A} \; i^{N.cA} \end{aligned} \tag{4.16}$$

Combining Eqs. (4.15) and (4.16) and writing them in a composite matrix form:

$$\begin{bmatrix} {}_{I}B.A \\ {}_{I}C.A \\ \vdots \\ {}_{I}N.A \end{bmatrix} = \begin{bmatrix} C_{sA}^{B.A} & & & C_{cA}^{B.A} & & \\ & C_{sA}^{C.A} & & & C_{cA}^{C.A} & \\ & & \vdots & & & \vdots \\ & & C_{sA}^{N.A} & & & C_{cA}^{N.A} \end{bmatrix} \begin{bmatrix} {}_{I}B.sA \\ {}_{I}C.sA \\ \vdots \\ {}_{I}N.sA \\ {}_{i}B.cA \\ {}_{i}C.cA \\ \vdots \\ {}_{i}N.cA \end{bmatrix} \quad (4.17)$$

Equation (4.17) can be compounded as

$$\begin{bmatrix} {}_{I}TA \end{bmatrix} = \begin{bmatrix} C_{sA}^{TA} & C_{cA}^{TA} \end{bmatrix} \begin{bmatrix} {}_{I}sA \\ {}_{i}cA \end{bmatrix} \quad (4.18)$$

where

$$ {}_{I}TA = \begin{bmatrix} {}_{I}B.A \\ {}_{I}C.A \\ \vdots \\ {}_{I}N.A \end{bmatrix} \quad (4.19a)$$

$$ {}_{I}sA = \begin{bmatrix} {}_{I}B.sA \\ {}_{I}C.sA \\ \vdots \\ {}_{I}N.sA \end{bmatrix} \quad (4.19b)$$

$$i^{cA} = \begin{bmatrix} i^{B.cA} \\ i^{C.cA} \\ \vdots \\ i^{N.cA} \end{bmatrix} \tag{4.19c}$$

$$C_{sA}^{TA} = \begin{bmatrix} C_{sA}^{B.A} & & & \\ & C_{sA}^{C.A} & & \\ & & \vdots & \\ & & & C_{sA}^{N.A} \end{bmatrix} \tag{4.19d}$$

$$C_{cA}^{TA} = \begin{bmatrix} C_{cA}^{B.A} & & & \\ & C_{cA}^{C.A} & & \\ & & \vdots & \\ & & & C_{cA}^{N.A} \end{bmatrix} \tag{4.19e}$$

Just as a relationship of tie currents in terms of sum currents and circulating currents is established for area A and given by Eq. (4.18) so can similar equations be developed for areas B, C, D....N. Writing such equations

$$\begin{bmatrix} I^{TB} \end{bmatrix} = \begin{bmatrix} C_{sB}^{TB} & C_{cB}^{TB} \end{bmatrix} \begin{bmatrix} I^{sB} \\ i^{cB} \end{bmatrix}$$

$$\vdots \tag{4.20}$$

$$\begin{bmatrix} I^{TN} \end{bmatrix} = \begin{bmatrix} C_{sN}^{TN} & C_{cN}^{TN} \end{bmatrix} \begin{bmatrix} I^{sN} \\ i^{cN} \end{bmatrix}$$

Combining Eqs. (4.18) and (4.20) and writing them in a composite form:

$$\begin{bmatrix} I^{TA} \\ I^{TB} \\ \vdots \\ I^{TN} \end{bmatrix} = \begin{bmatrix} C_{sA}^{TA} & & & C_{cA}^{TA} & & \\ & C_{sB}^{TB} & & & C_{cB}^{TB} & \\ & & \vdots & & & \vdots \\ & & C_{sN}^{TN} & & & C_{cN}^{TN} \end{bmatrix} \begin{bmatrix} I^{sA} \\ I^{sB} \\ \vdots \\ I^{sN} \\ i^{cA} \\ i^{cB} \\ \vdots \\ i^{cN} \end{bmatrix} \tag{4.21}$$

Equation (4.21) in a compounded form can be expressed as

$$\begin{bmatrix} I^{TA} \\ I^{TB} \\ \vdots \\ I^{TN} \end{bmatrix} = \begin{bmatrix} C_{sM}^{TM} & C_{cM}^{TM} \end{bmatrix} \begin{bmatrix} I^{sM} \\ \\ i^{cM} \end{bmatrix} \tag{4.22}$$

The above transformation is of the form

$$I^{T3.1} = C_{sc3.2}^{T3.1} \; I^{sc3.2} \tag{4.23}$$

It should be noted that in Eqs. (4.21), (4.22) and (4.23) each tie appears twice. The current vector in Eq. (4.23) $I^{T3.1}$ represents the tie currents in reference frame 3.1. The current vector $I^{sc3.2}$ represents the hypothetical sum currents (I^{sM}) and the circulation currents (i^{cM}) in reference frame 3.2.

4.2 Building Algorithm for Connection Matrices

The sum matrix C_{sM}^{TM} has area ties as rows and system sum flows as columns, whereas the circulation matrix C_{cM}^{TM} has area ties as rows and system circulating flows as columns. The matrix entries are assigned values according to the following algorithm:

1. Enter +1 if the flow of the new variable is in the same direction as the old variable.
2. Enter -1 if the flow of the new variable is in the opposite direction as the old variable.
3. All other entries are zero.

4.3 Practical Determination of Sum and Circulation Matrices

Figure 4.2 illustrates the interconnection among the four area power system. One tie between each pair of interconnected areas is identified as the sum tie through which the summation of the currents of all ties between the two areas is defined to flow. Between the remaining ties and the sum tie, independent loops are identified through which the circulating currents are defined to flow. For example, there are seven ties between area A and area D. Tie #6 is identified as the sum tie. Circulating flows c5 through c10 are identified as flowing between the remaining six ties and the sum tie.

Application of the building algorithm for connection matrices produces half of the sum and circulation matrices given by Table 4.1, the other half being exactly the same but with opposite signs.

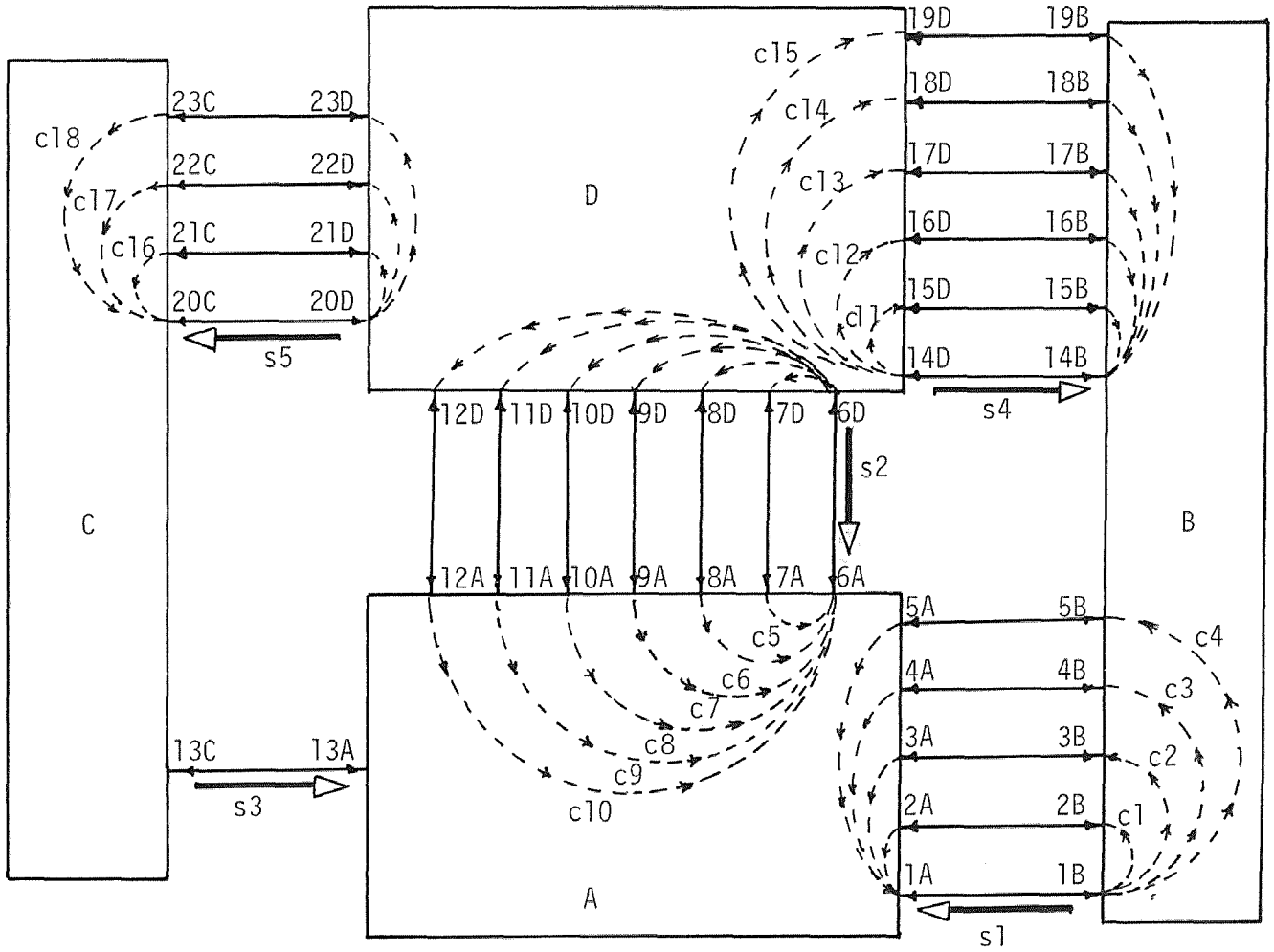

Fig. 4.2 Multiarea Grid Interconnections Expressed as Sum and Circulating Paths

Table 4.1 Sum and Circulation Matrices

	S1	S2	S3	S4	S5	c1	c2	c3	c4	c5	c6	c7	c8	c9	c10	c11	c12	c13	c14	c15	c16	c17	c18
1A	1					-1	-1	-1	-1														
2A						1																	
3A							1																
4A								1															
5A									1														
6A		1								-1	-1	-1	-1	-1	-1								
7A										1													
8A											1												
9A												1											
10A													1										
11A														1									
12A															1								
13A			1																				
14B				1												-1	-1	-1	-1	-1			
15B																1							
16B																	1						
17B																		1					
18B																			1				
19B																				1			
20C					1																-1	-1	-1
21C																					1		
22C																						1	
23C																							1

4.4 Development of Net Interchange and Sneak Matrices

In an interconnected multiarea grid power system the sum currents that exist between adjacent areas are generally not known. What is normally known is the net interchange flows leaving each area. The transformation of the sum currents to the net interchange currents follows next.

The net interchange current I^{Ek} is defined as the summation of all tie currents leaving an area. Thus, for area A, the net interchange current I^{EA} can be expressed as

$$I^{EA} = - \sum_{A} I^{TA} \tag{4.24}$$

or

$$I^{EA} = - \left[I^{B.A} + I^{C.A} + \ldots + I^{N.A} \right] \tag{4.25}$$

The net interchange currents can also be expressed as the summation of the sum currents entering the area

$$I^{EA} = - \sum_{A} I^{sA} \tag{4.26}$$

or

$$I^{EA} = - \left[I^{B.sA} + I^{C.sA} + \ldots + I^{N.sA} \right] \tag{4.27}$$

Recalling the fundamental network theory presented by O. Veblen (1931) for a system consisting of n nodes and e elements, it can be stated that:

The tree elements or the branches (b) = n-1 (4.28)

The cotree elements or the links (l) = e-b = e-n+1 (4.29)

When each of the links is inserted in turn in the network formed from the tree branches, a mesh is formed. These meshes are called basic meshes, and are (e-n+1) in number.

The above theory will be used in expressing the sum currents in terms of the net interchange currents. To do so, each area will be treated as a node. The sum powers between the adjacent areas will be treated as elements. The orientation of the elements will be kept the same as that of the sum currents. One node of the network is selected as a reference. Between the remaining nodes and the reference node a tree is formed through which the net interchange currents are assumed to flow. Figure 4.3 represents the reduced original network of Fig. 2.1. I^{EB}, I^{EC} and I^{ED} represent the net interchange currents flowing from areas B, C and D to area A. The four areas represented by (n)=4 nodes, thus have tree branches (b) = (n-1) = 3. Therefore we can write:

number of total interchanges (Ek) = number of areas (N)-1 (4.30)

Let us define the basic meshes as the sneak meshes (Snk). In Fig. 4.3 Snk1 and Snk2 are the sneak meshes that are formed by inserting in turn the links (l)= (e-n+1) - 2, through which sneak currents I^{Snk1} and I^{Snk2} are assumed to flow. Thus, we

can replace the sum currents represented by e elements in terms of the net interchange currents represented by (n-1) branches and the sneak currents represented by (e-n+1) links. Writing the relationship between such quantities

$$\text{Number of sums (s)} = \text{number of net interchanges (Ek)} + \text{number of sneaks (Snk)} \tag{4.31}$$

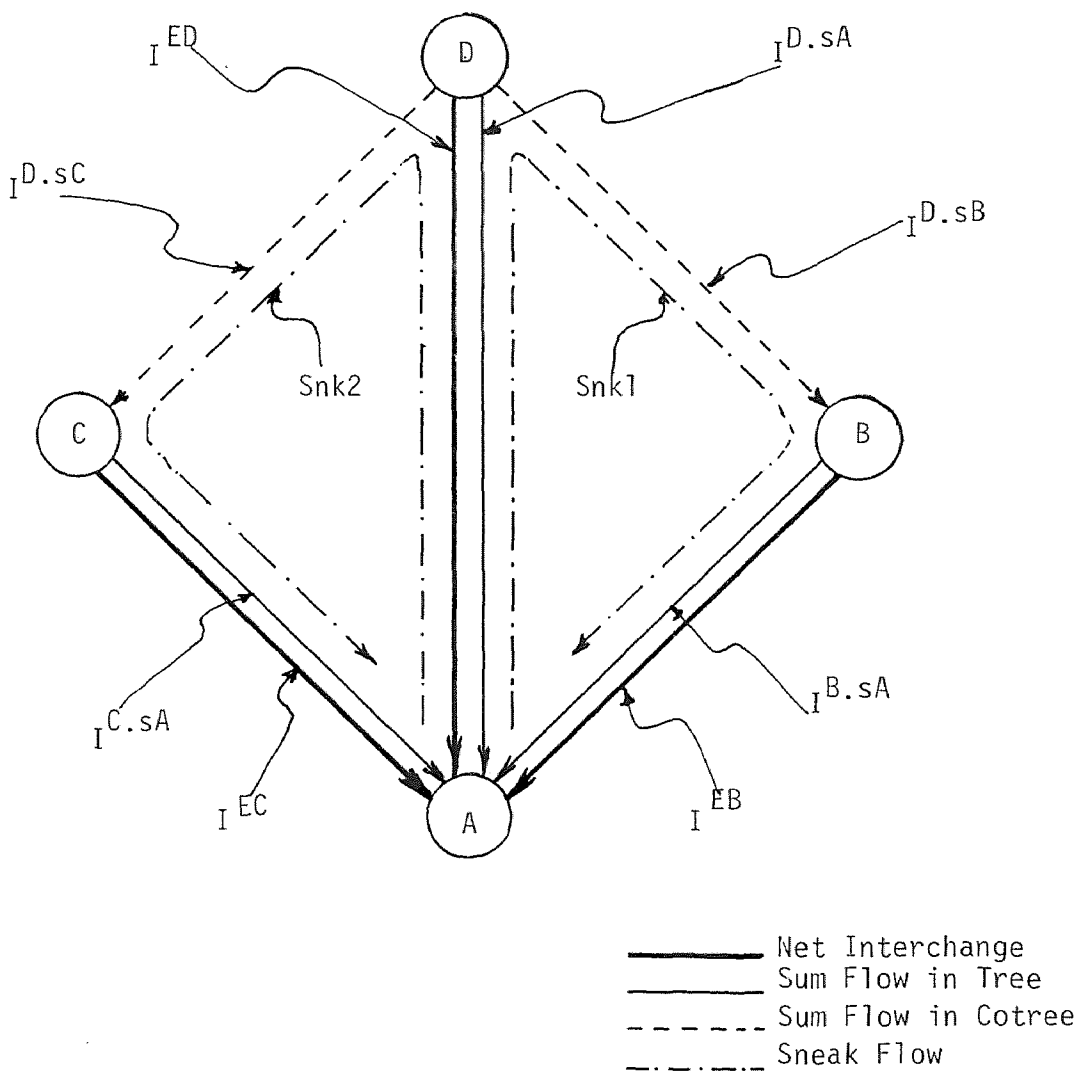

Fig. 4.3 Multiarea Grid Net Interchange and Sneak Paths

Let us now write the relationship between the sum currents and net interchange currents. For area A we can write

$$_{I}B.sA = {}_{I}EB + {}_{i}Snk1 \tag{4.32a}$$

$$_{I}C.sA = {}_{I}EC + {}_{i}Snk2 \tag{4.32b}$$

$$_{I}D.sA = {}_{I}ED - {}_{i}Snk1 - {}_{i}Snk2 \tag{4.32c}$$

Writing the above equations in a matrix form:

$$\begin{bmatrix} {}_{I}B.sA \\ {}_{I}C.sA \\ {}_{I}D.sA \end{bmatrix} = \begin{array}{c} \begin{array}{ccccc} EB & EC & ED & Snk1 & Snk2 \end{array} \\ \begin{bmatrix} 1 & & & 1 & \\ & 1 & & & 1 \\ & & 1 & -1 & -1 \end{bmatrix} \end{array} \begin{bmatrix} {}_{I}EB \\ {}_{I}EC \\ {}_{I}ED \\ {}_{i}Snk1 \\ {}_{i}Snk2 \end{bmatrix} \tag{4.33}$$

In a compounded form it can be expressed as

$$\begin{bmatrix} {}_{I}sA \end{bmatrix} = \begin{bmatrix} C^{sA}_{Ek} & C^{sA}_{Snk} \end{bmatrix} \begin{bmatrix} {}_{I}Ek \\ {}_{i}Snk \end{bmatrix} \tag{4.34}$$

where,

$$_{I}sA = \begin{bmatrix} {}_{I}B.sA \\ {}_{I}C.sA \\ {}_{I}D.sA \end{bmatrix} \tag{4.35a}$$

$$I^{Ek} = \begin{bmatrix} I^{EB} \\ I^{EC} \\ I^{ED} \end{bmatrix} \tag{4.35b}$$

$$i^{Snk} = \begin{bmatrix} i^{Snk1} \\ i^{Snk2} \end{bmatrix} \tag{4.35c}$$

$$C^{sA}_{Ek} = \begin{array}{c} \\ B.A \\ C.A \\ D.A \end{array} \begin{array}{c} \begin{array}{ccc} EB & EC & ED \end{array} \\ \begin{bmatrix} 1 & & \\ & 1 & \\ & & 1 \end{bmatrix} \end{array} \tag{4.35d}$$

$$C^{sA}_{Snk} = \begin{array}{c} \\ B.A \\ C.A \\ D.A \end{array} \begin{array}{c} \begin{array}{cc} Snk1 & Snk2 \end{array} \\ \begin{bmatrix} 1 & \\ & 1 \\ -1 & -1 \end{bmatrix} \end{array} \tag{4.35e}$$

Just as a relationship of the sum currents and the net interchange and sneak currents is established for area A and given by Eq. (4.34) so can similar equations be developed for areas B, C, ...N.

Writing such equations

$$\begin{bmatrix} I^{sB} \end{bmatrix} = \begin{bmatrix} C^{sB}_{Ek} & C^{sB}_{Snk} \end{bmatrix} \begin{bmatrix} I^{Ek} \\ i^{Snk} \end{bmatrix}$$

$$\vdots \qquad (4.36)$$

$$\begin{bmatrix} I^{sN} \end{bmatrix} = \begin{bmatrix} C^{sN}_{Ek} & C^{sN}_{Snk} \end{bmatrix} \begin{bmatrix} I^{Ek} \\ i^{Snk} \end{bmatrix}$$

Combining Eqs. (4.34) and (4.36) and writing them in a composite matrix form

$$\begin{bmatrix} I^{sA} \\ I^{sB} \\ \vdots \\ I^{sN} \end{bmatrix} \begin{bmatrix} C^{sA}_{Ek} & C^{sA}_{Snk} \\ C^{sB}_{Ek} & C^{sB}_{Snk} \\ \vdots & \vdots \\ C^{sN}_{Ek} & C^{sN}_{Snk} \end{bmatrix} \begin{bmatrix} I^{Ek} \\ i^{Snk} \end{bmatrix} \qquad (4.37)$$

The above equation in a compounded form can be expressed as

$$\begin{bmatrix} I^{sM} \end{bmatrix} = \begin{bmatrix} C^{sM}_{Ek} & C^{sM}_{Snk} \end{bmatrix} \begin{bmatrix} I^{Ek} \\ i^{Snk} \end{bmatrix} \qquad (4.38)$$

The above transformation is of the form

$$I^{s3.2} = C^{s3.2}_{EkSnk3.3} \; I^{EkSnk3.3} \qquad (4.39)$$

The current vector $I^{s3.2}$ represents the sum currents of Eqs. (4.21) and (4.22) in reference frame 3.2. The current

vector $I^{EkSnk3.3}$ represents the hypothetical net interchange currents (I^{Ek}) and the sneak currents (i^{Snk}) in reference frame 3.3.

The elements of the net interchange matrix C_{Ek}^{sM} and the sneak matrix C_{Snk}^{sM} are obtained using the building algorithm for connection matrices. For the system of Fig. 4.2 such matrices are given by Table 4.2.

Table 4.2 Net Interchange and Sneak Matrices

	EB	EC	ED	Snk1	Snk2
B.sA	1	0	0	0	0
D.sA	0	0	1	-1	-1
C.sA	0	1	0	0	0
D.sB	0	0	0	1	0
D.sC	0	0	0	0	1

4.5 Transformation of Impedance Models to Reference Frame 3.3

The matrix Eq. (4.38) can be rewritten by adding appropriately the circulation current vector on both sides of the equation and a unit matrix as shown below.

$$\begin{bmatrix} I^{sM} \\ \\ i^{cM} \end{bmatrix} = \begin{bmatrix} C_{Ek}^{sM} & C_{Snk}^{sM} & 0 \\ \\ 0 & 0 & 1 \end{bmatrix} \begin{bmatrix} I^{Ek} \\ i^{Snk} \\ i^{cM} \end{bmatrix} \qquad (4.40)$$

The above transformation is of the form

$$I^{sc3.2} = C^{sc3.2}_{EkSnkcM3.3}\ I^{EkSnkcM3.3} \tag{4.41}$$

The current vector $I^{EkSnkcM3.3}$ represents the net interchange currents (I^{Ek}), the sneak currents (i^{Snk}) and the circulating currents (i^{cM}) in reference frame 3.3.

The transformation of the tie currents ($I^{T3.1}$) of reference frame 3.1 to the net interchange currents (I^{Ek}), the sneak currents (i^{Snk}) and the circulating currents (i^{cM}) in reference frame 3.3 can be directly obtained by substituting Eq. (4.41) in Eq. (4.23)

$$I^{T3.1} = C^{T3.1}_{sc3.2}\ C^{sc3.2}_{EkSnkcM3.3}\ I^{EkSnkcM3.3} \tag{4.42}$$

Equation (4.42) can be written as

$$I^{T3.1} = C^{T3.1}_{EkSnkcM3.3}\ I^{EkSnkcM3.3} \tag{4.43}$$

where

$$C^{T3.1}_{EkSnkcM3.3} = C^{T3.1}_{sc3.2}\ C^{sc3.2}_{EkSnkcM3.3} \tag{4.44}$$

The transformation matrix $C^{T3.1}_{EkSnkcM3.3}$ is given by

$$C^{T3.1}_{EkSnkcM3.3} = \begin{bmatrix} C^{TM}_{sM}C^{sM}_{Ek} & C^{TM}_{sM}C^{sM}_{Snk} & C^{TM}_{cM} \end{bmatrix} \tag{4.45}$$

The reference frame 3.1 currents are given by

$$I^{3.1} = \begin{bmatrix} I^{GA} \\ I^{GB} \\ \vdots \\ I^{GN} \\ I^{TA} \\ I^{TB} \\ \vdots \\ I^{TN} \end{bmatrix} \tag{4.46}$$

or in the compounded form by

$$I^{3.1} = \begin{bmatrix} I^{G3.1} \\ I^{T3.1} \end{bmatrix} \tag{4.47}$$

Substituting Eq. (4.43) in (4.47) we have

$$I^{3.1} = \begin{bmatrix} 1 & 0 \\ 0 & C^{T3.1}_{EkSnkcM3.3} \end{bmatrix} \begin{bmatrix} I^{G3.3} \\ I^{EkSnkcM3.3} \end{bmatrix} \tag{4.48}$$

where the generator currents ($I^{G3.3}$) in reference frame 3.3 are the same as that in reference frame 3.1.

The above transformation is of the form

$$I^{3.1} = C^{3.1}_{3.3}\, I^{3.3} \tag{4.49}$$

In an expanded form the transformation matrix $C_{3.3}^{3.1}$ is given by

$$C_{3.3}^{3.1} = \begin{array}{c} \\ GA \\ GB \\ : \\ GN \\ TA \\ TB \\ : \\ TN \end{array} \begin{array}{c} \begin{array}{ccccccc} GA & GB & : & GN & Ek & Snk & cM \end{array} \\ \begin{bmatrix} 1 & & & & & & \\ & 1 & & & & & \\ & & : & & & & \\ & & & 1 & & & \\ & & & & C_{Ek}^{TA} & C_{Snk}^{TA} & C_{cM}^{TA} \\ & & & & C_{Ek}^{TB} & C_{Snk}^{TB} & C_{cM}^{TB} \\ & & & & : & : & : \\ & & & & C_{Ek}^{TN} & C_{Snk}^{TN} & C_{cM}^{TN} \end{bmatrix} \end{array} \tag{4.50}$$

The voltages in reference frame 3.3 are given by

$$V_{3.3} = \left[C_{3.3}^{3.1}\right]_t \left[V_{3.1}\right] \tag{4.51}$$

or in the expanded form

$$V_{3.3} = \begin{bmatrix} E_{GA}-E_{LA} \\ E_{GB}-E_{LB} \\ : \\ E_{GN}-E_{LN} \\ C_{Ek}^{TA}\,(E_{TA}-E_{LA})+C_{Ek}^{TB}(E_{TB}-E_{LB})+\ldots+C_{Ek}^{TN}(E_{TN}-E_{LN}) \\ C_{Snk}^{TA}\,(E_{TA}-E_{LA})+C_{Snk}^{TB}(E_{TB}-E_{LB})+\ldots+C_{Snk}^{TN}(E_{TN}-E_{LN}) \\ C_{cM}^{TA}\,(E_{TA}-E_{LA})+C_{cM}^{TB}(E_{TB}-E_{LB})+\ldots+C_{cM}^{TN}(E_{TN}-E_{LN}) \end{bmatrix} \tag{4.52}$$

The bus impedance equation in reference frame 3.3 is given by

$$V_{3.3} = Z_{3.3-3.3}\, I^{3.3} \tag{4.53}$$

where the impedance matrix in reference frame 3.3 is given by

$$Z_{3.3-3.3} = \left[C^{3.1}_{3.3}\right]_t \left[Z_{3.1-3.1}\right] \left[C^{3.1}_{3.3}\right] \tag{4.54}$$

In an expanded form $Z_{3.3-3.3}$ is given by

$$\left[\begin{array}{c|c|c|c|c|c}
Z1^{A} & & & Z2^{A}C^{TA}_{Ek} & Z2^{A}C^{TA}_{Snk} & Z2^{A}C^{TA}_{cM} \\
\hline
 & \vdots & & \vdots & \vdots & \vdots \\
\hline
 & & Z1^{N} & Z2^{N}C^{TN}_{Ek} & Z2^{N}C^{TN}_{Snk} & Z2^{N}C^{TN}_{cM} \\
\hline
Z3^{A}C^{TA}_{Snk} & \vdots & Z3^{N}C^{TN}_{Snk} & \begin{array}{c} C^{TA}_{Ek}Z4^{A}C^{TA}_{Ek}+ \\ +\ldots \quad \ldots+ \\ +C^{TN}_{Ek}Z4^{N}C^{TN}_{Ek} \end{array} & \begin{array}{c} C^{TA}_{Ek}Z4^{A}C^{TA}_{Snk} \\ +\ldots \quad \ldots+ \\ C^{TN}_{Ek}Z4^{N}C^{TN}_{Snk} \end{array} & \begin{array}{c} C^{TA}_{Ek}Z4^{A}C^{TA}_{cM} \\ +\ldots \quad \ldots+ \\ C^{TN}_{Ek}Z4^{N}C^{TN}_{cM} \end{array} \\
\hline
Z3^{A}C^{TA}_{Snk} & \vdots & Z3^{N}C^{TN}_{Snk} & \begin{array}{c} C^{TA}_{Snk}Z4^{A}C^{TA}_{Ek} \\ +\ldots \quad \ldots+ \\ C^{TN}_{cM}Z4^{A}C^{TA}_{Ek} \end{array} & \begin{array}{c} C_{Snk}Z4^{A}C_{Snk} \\ +\ldots \quad \ldots+ \\ C^{TA}_{cM}Z4^{A}C^{TA}_{Snk} \end{array} & \begin{array}{c} C_{Snk}Z4^{A}C^{TA} \\ +\ldots \quad \ldots+ \\ C^{TA}_{cM}Z4^{A}C^{TA}_{cM} \end{array} \\
\hline
Z3^{A}C^{TA}_{cM} & \vdots & Z3^{N}C^{TN}_{cM} & \begin{array}{c} C^{TA}_{cM}Z4^{A}C^{TA}_{Ek} \\ +\ldots \quad \ldots+ \\ C^{TN}Z4^{N}C^{TN} \end{array} & \begin{array}{c} C^{TA}_{cM}Z4^{A}C^{TA}_{Snk} \\ +\ldots \quad \ldots+ \\ C^{TN}Z4^{N}C^{TN} \end{array} & \begin{array}{c} C^{TA}_{cM}Z4^{A}C^{TA}_{cM} \\ +\ldots \quad \ldots+ \\ C^{TN}Z4^{N}C^{TN} \end{array}
\end{array}\right] \tag{4.55}$$

CHAPTER 5

TIE POWER MODEL

In Chapter 4, the individual area generator and tie currents of reference frame 3.1 were transformed to a new set of variables in reference frame 3.3, i.e. the individual area generator, net interchange, sneak and circulating currents. In a power system, the variables that are generally known are the generator and net interchange variables. The sneak and circulating variables are generally not known. Therefore, it is necessary to develop a simple procedure to eliminate such variables.

5.1 Extraction of Sneak and Circulating Axis

Extracting the sneak and circulating axis from Eq. 4.53

$$\begin{bmatrix} V_{Snk} \\ \\ \\ V_{cM} \end{bmatrix} = \left[\begin{array}{c|c|c|c|c} & & C^{TA}_{Snk} Z4^{A} C^{TA} & C^{TA}_{Snk} Z4^{A} C^{TA}_{Snk} & C^{TA} \; Z4^{A} C^{TA} \\ Z3^{A} C^{TA}_{Snk} & Z3^{N} C^{TN}_{Snk} & +\ldots \quad \ldots+ & +\ldots \quad \ldots+ & +\ldots \quad \ldots+ \\ & & C^{TN}_{Snk} Z4^{N} C^{TN}_{Ek} & C^{TN}_{Snk} Z4^{N} C^{TN}_{Snk} & C^{TN}_{Snk} Z4^{N} C^{TN}_{cM} \\ \hline & & C^{TA}_{cM} Z4^{A} C^{TA}_{Ek} & C^{TA}_{cM} Z4^{A} C^{TA}_{Snk} & C^{TA}_{cM} Z4^{A} C^{TA}_{cM} \\ Z3^{A} C^{TA}_{cM} & Z3^{N} C^{TN}_{cM} & +\ldots \quad \ldots+ & +\ldots \quad \ldots+ & +\ldots \quad \ldots+ \\ & & C^{TN}_{cM} Z4^{N} C^{TN}_{Ek} & C^{TN}_{cM} Z4^{A} C^{TN}_{Snk} & C^{TN}_{cM} Z4^{A} C^{TN}_{cM} \end{array}\right] \begin{bmatrix} I^{GA} \\ \vdots \\ I^{GN} \\ I^{Ek} \\ i^{Snk} \\ i^{cM} \end{bmatrix} \quad (5.1)$$

Both the sneak and circulating variables represent the flow of current through closed loops. These variables can be designated

by a new variable (cn) that combines both axes. The new voltage equation is given by

$$V_{cn} = \left[\begin{array}{c|c|c|c} & & C_{cn}^{TA}\ Z4^{A} C_{Ek}^{TA} & C_{cn}^{TA} Z4^{A} C_{cn}^{TA} \\ Z3^{A} C_{cn}^{TA} & \cdots & + \cdots \quad \cdots + & + \cdots \quad \cdots + \\ & & C_{cn}^{TN} Z4^{N} C_{Ek}^{TN} & C_{cn}^{TN} Z4^{N} C_{cn}^{TN} \end{array}\right] \begin{bmatrix} I^{GA} \\ \vdots \\ I^{GN} \\ I^{Ek} \\ i^{cn} \end{bmatrix} \qquad (5.2)$$

Equation (5.2) in a compounded form can be written as

$$V_{cn} = Z_{GA}\ I^{GA} + Z_{GB} I^{GB} + \ldots\ Z_{GN} I^{GN} + Z_{Ek} I^{Ek} + Z_{cn} I^{cn} \qquad (5.3)$$

where

$$Z_{GA} = Z3^{A}\ C_{cn}^{TA} \qquad (5.4a)$$

$$Z_{GB} = Z3^{B} C_{cn}^{TB} \qquad (5.4b)$$

$$\vdots$$

$$Z_{GN} = Z3^{N}\ C_{cn}^{TN} \qquad (5.4c)$$

$$Z_{Ek} = C_{cn}^{TA}\ Z4^{A}\ C_{Ek}^{TA} + \ldots + C_{cn}^{TN}\ Z4^{N}\ C_{Ek}^{TN} \qquad (5.4d)$$

$$Z_{cn} = C_{cn}^{TA}\ Z4^{A}\ C_{cn}^{TA} + \ldots + C_{cn}^{TN}\ Z4^{N}\ C_{cn}^{TN} \qquad (5.4e)$$

V_{cn} in Eq. (5.3) represents the voltages around the closed loops (cn). By application of Kirchhoff's Law around the closed loops, V_{cn} becomes zero. Thus, Eq. (5.3) can be written as

$$\sum_{n} Z_{n}\ I^{n} = 0 \qquad (5.5)$$

where n = GA, GB... GN, Ek, cn.

The above equation signifies a functional relationship between the circulating currents and the generator and net interchange currents. Conventionally, the circulating currents are eliminated first to obtain a complex tie current model which is subsequently projected into the power reference frame giving a complex tie power model. However, that method involves manipulation of matrices with complex coefficients necessitating increased computer memory and time requirement for solution. In this procedure, circulating powers are directly eliminated using actual impedances without first eliminating circulating currents, thereby reducing both computer memory and time requirement, yielding a real tie power model. This is particularly important where system information is necessary only in terms of real powers, such as in the process of economic dispatch of power for a multiarea grid system.

5.2 Elimination of Circulating Powers

Let the complex components of the currents and impedances in Eq. 5.5 be expressed as

$$I^n = I^{dn} + j\, I^{qn} \tag{5.6}$$

$$Z_n = R_n + j\, X_n \tag{5.7}$$

Substituting Eqs. (5.6) and (5.7) in (5.5) we have

$$\sum_n (I^{dn} + j\, I^{qn})\,(R_n + j\, X_n) = 0 \tag{5.8}$$

Multiplying and expanding Eq. (5.8)

$$\sum_n (I^{dn} R_n - I^{qn} X_n) + j (I^{qn} R_n + I^{dn} X_n) = 0 \qquad (5.9)$$

The summation of the real terms or the summation of the imaginary terms may be equated to zero separately. However, since $I^{dn}R_n$ is generally much smaller than $I^{qn}X_n$, equating the imaginary terms to zero would produce more accurate numerical answers.

Therefore,

$$\sum_n (I^{qn} R_n + I^{dn} X_n) = 0 \qquad (5.10)$$

The components of Eq. (5.10) can be expressed in terms of real power (P), imaginary power (Q), voltage magnitude (V) and phase angle (θ). With the quantities defined in Fig. 5.1 we can write

$$I^{dn} = \frac{1}{V_n} (P^n \cos\theta_n + Q^n \sin\theta_n) \qquad (5.11)$$

and

$$I^{qn} = \frac{-1}{V_n} (-P^n \sin\theta_n + Q^n \cos\theta_n) \qquad (5.12)$$

Q^n can be eliminated as a variable by assuming that the ratio of Q/P will remain a constant value S_n. Q^n can be the non-intercept part of the Q characteristic only, with the Q intercept included as a part of the load. Rewriting Eqs. (5.11) and (5.12),

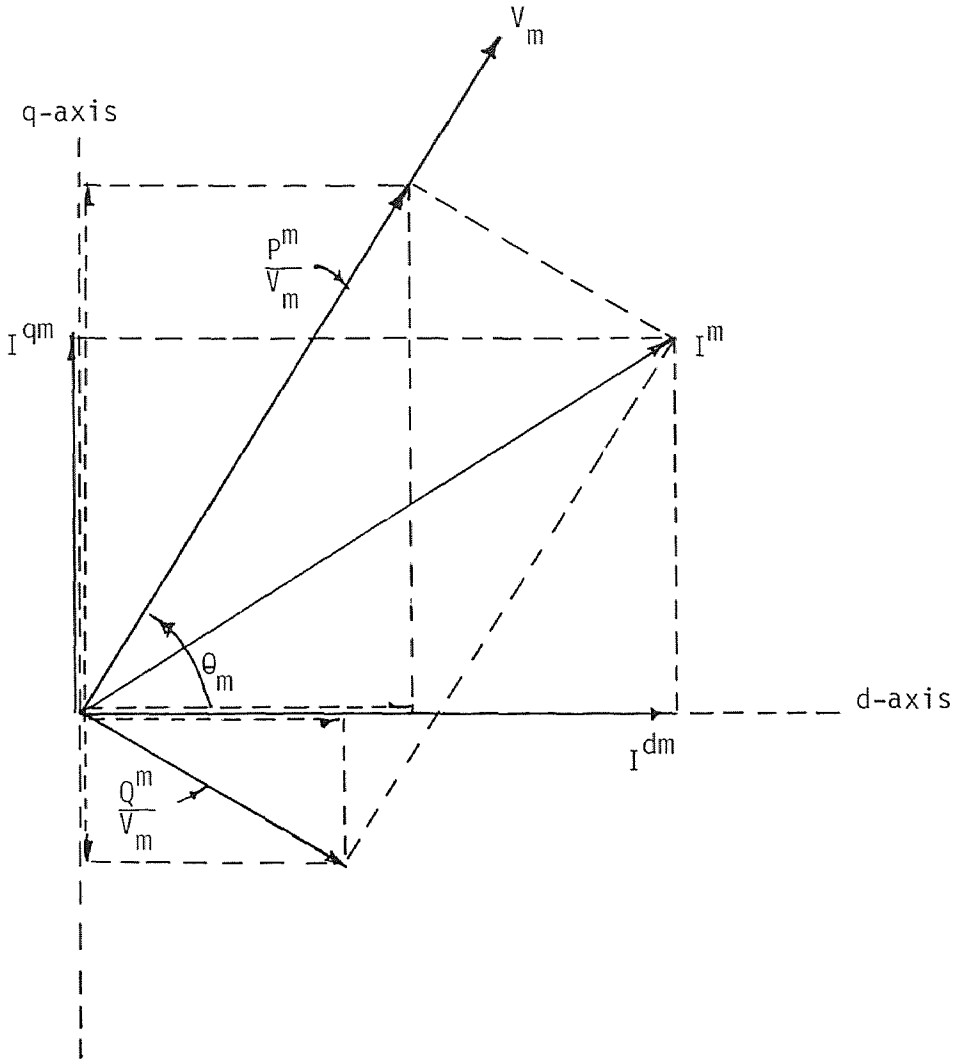

Fig. 5.1 Vector Diagram for Axes Transformation

$$I^{dn} = \frac{P^n}{V_n} (\cos\theta_n + S_n \sin\theta_n) \tag{5.13}$$

$$I^{qn} = \frac{P^n}{V_n} (\sin\theta_n - S_n \cos\theta_n) \tag{5.14}$$

To project the net interchange currents I^{Ek}, a weighted voltage is defined as follows:

$$I^{EA} = -\sum_A I^{TA} = -\sum_A \left(\frac{P^{TA} + j\ Q^{TA}}{V_{TA} \angle\theta_{TA}}\right) \tag{5.15}$$

where $(P^{TA} + j\ Q^{TA})$ represents the tie powers entering area A and V_{TA} represents the tie voltages of area A.

The total power interchange of area A is defined to be the negative sum of all tie powers

$$P^{EA} + j\ Q^{EA} = -\sum_A (P^{TA} + j\ Q^{TA}) \tag{5.16}$$

Defining $V_{Ek}\angle\theta_{Ek}$ as the weighted interchange voltage for area K

$$P^{Ek} + j\ Q^{Ek} = V_{Ek} \angle\theta_{Ek}\ I^{Ek*} \tag{5.17}$$

Substituting Eqs. (5.15) and (5.16) into (5.17)

$$V_{Ek} \angle\theta_{Ek} = \sum_k (P^{Tk} + j\ Q^{Tk}) \Big/ \sum_k \left(\frac{P^{Tk} + j\ Q^{Tk}}{V_{Tk} \angle\theta_{Tk}}\right) \tag{5.18}$$

While the ratio of Q/P for the net interchange can be defined as a weighted value as

$$S_{Ek} = \frac{\sum_k S_{Tk}\ P^{Tk}}{\sum_k P^{Tk}} \tag{5.19}$$

Similarly the voltages and Q/P ratios for the circulating axis can be defined.

Substituting the complex current components given by Eqs. (5.13) and (5.14) into Eq. (5.10) we have,

$$\sum_n \left\{ \frac{R_n}{V_n} (\sin\theta_n - S_n \cos\theta_n) + \frac{X_n}{V_n} (\cos\theta_n + S_n \sin\theta_n) \right\} P^n = 0 \quad (5.20)$$

Let

$$A_n = \frac{R_n}{V_n} (\sin\theta_n - S_n \cos\theta_n) + \frac{X_n}{V_n} (\cos\theta_n + S_n \sin\theta_n) \quad (5.21)$$

Then Eq. (5.20) becomes

$$\sum_n A_n P^n = 0 \quad ; \; n = GA, GB, \ldots GN, Ek, cn \quad (5.22)$$

Equation (5.22) shows a linear relationship between the circulating powers and the generator and net interchange powers. Expanding Eq. (5.22) and expressing the circulating powers in terms of the generator and net interchange powers

$$P^{cn} = - \begin{bmatrix} A_{cn}^{-1} A_G & A_{cn}^{-1} A_{Ek} \end{bmatrix} \begin{bmatrix} P^G \\ P^{Ek} \end{bmatrix} \quad (5.23)$$

$$\text{where} \quad P^G = \begin{bmatrix} P^{GA} \\ \vdots \\ P^{GN} \end{bmatrix} \quad (5.24)$$

5.3 Formation of Tie Power Model

The relationship between the area tie currents and the net interchange, sneak and circulating currents is given by

Eq. (4.43). Writing Eq. (4.43) in an expanded form and combining the sneak and circulating axis we have

$$I^T = \begin{bmatrix} C_{Ek}^T & C_{cn}^T \end{bmatrix} \begin{bmatrix} I^{Ek} \\ I^{cn} \end{bmatrix} \tag{5.25}$$

We can write a similar equation relating the tie powers as

$$P^T = \begin{bmatrix} C_{Ek}^T & C_{cn}^T \end{bmatrix} \begin{bmatrix} P^{Ek} \\ P^{cn} \end{bmatrix} \tag{5.26}$$

Substituting P^{cn} from Eq. (5.23) in Eq. (5.26) we have

$$P^T = \begin{bmatrix} C_{Ek}^T & C_{cn}^T \end{bmatrix} \begin{bmatrix} 0 & 1 \\ -A_{cn}^{-1}A_G & -A_{cn}^{-1}A_{Ek} \end{bmatrix} \begin{bmatrix} P^G \\ P^{Ek} \end{bmatrix} \tag{5.27}$$

or

$$P^T = \begin{bmatrix} -C_{cn}^T A_{cn}^{-1} A_G & C_{Ek}^T - C_{cn}^T A_{cn}^{-1} A_{Ek} \end{bmatrix} \begin{bmatrix} P^G \\ P^{Ek} \end{bmatrix} \tag{5.28}$$

Let

$$SC_G = \begin{bmatrix} -C_{cn}^T A_{cn}^{-1} A_G \end{bmatrix} \tag{5.29a}$$

$$SC_{Ek} = \begin{bmatrix} C_{Ek}^T - C_{cn}^T A_{cn}^{-1} A_{Ek} \end{bmatrix} \tag{5.29b}$$

Then the tie power model is provided by

$$P^T = \begin{bmatrix} SC_G & SC_{Ek} \end{bmatrix} \begin{bmatrix} P^G \\ P^{Ek} \end{bmatrix} \tag{5.30}$$

It is noted that the net interchange power vector P^{Ek} in Eq. (5.30) does not include the net interchange power of the reference area. Therefore, a transformation relating the power vector P^{Ek} to a new power vector P^{E} that includes all net interchange powers will be defined.

$$P^{Ek} = C_E^{Ek} \quad P^E \tag{5.31}$$

Equation (5.31 in an expanded form is

$$\begin{bmatrix} P^{EB} \\ P^{EC} \\ \vdots \\ P^{EN} \end{bmatrix} = \begin{array}{c} \begin{array}{ccccc} EA & EB & EC & & EN \end{array} \\ \begin{bmatrix} -1 & 0 & -1 & \dots & -1 \\ -1 & -1 & 0 & \dots & -1 \\ \vdots & \vdots & \vdots & \vdots & \vdots \\ -1 & -1 & -1 & \dots & 0 \end{bmatrix} \end{array} \begin{bmatrix} P^{EA} \\ P^{EB} \\ P^{EC} \\ \vdots \\ P^{EN} \end{bmatrix} \tag{5.32}$$

The tie power model of Eq. (5.30) modified to include the reference area net interchange powers can be obtained by substituting Eq. (5.31) in Eq. (5.30).

$$P^T = \begin{bmatrix} SC_G & SC_{Ek} \end{bmatrix} \begin{bmatrix} 1 & 0 \\ 0 & C_E^{Ek} \end{bmatrix} \begin{bmatrix} P^G \\ P^E \end{bmatrix} \tag{5.33}$$

or

$$P^T = \begin{bmatrix} SC_G & SC_{Ek}C_E^{Ek} \end{bmatrix} \begin{bmatrix} P^G \\ P^E \end{bmatrix} \tag{5.34}$$

Then the tie power model can be expressed as

$$P^T = \begin{bmatrix} SC_G & SC_E \end{bmatrix} \begin{bmatrix} P^G \\ P^E \end{bmatrix} \tag{5.35}$$

where

$$SC_E = SC_{Ek} C_E^{Ek} \tag{5.36}$$

5.4 Practical Determination of Tie Power Model

For the multiarea grid power system a tie power model expressed by Eq. (5.35) was obtained using the base case 65% load conditions. The elements of the tie power model are given in Appendix IV. The matrix (SC_G) so obtained had a dimension of 23X37 representing 23 ties and 37 generators. The matrix (SC_E) so obtained has a dimension of 23X4 representing 23 ties and 4 net interchanges. The tie power model was used to predict the tie flows, given the generator and net interchange powers for a set of system load conditions. Tables 5.1, 5.2, 5.3 and 5.4 provide the tie powers predicted by the model at 100, 80, 65 and 40% load conditions. The tie powers predicted by the model are compared to the actual tie powers obtained from load flow studies in the same tables.

The root mean square (rms) error was calculated for the 23 tie lines using the following expression

$$\text{rms error} = \sqrt{\frac{\Sigma\ (\text{Model Tie Power} - \text{Load Flow Tie Power})^2}{4}} \tag{5.37}$$

where the summation is of the deviations of all 4 load conditions. The rms error in megawatts for the 23 ties is provided by Table 5.5.

Table 5.1 Tie Power Comparison at 100% Load

Tie	Model Power Flow	Actual Load Flow
1A	-140.16	-142.47
2A	-358.09	-357.14
3A	-193.53	-192.46
4A	-88.31	-87.87
5A	61.08	61.18
6A	-893.87	-894.48
7A	-1326.61	-1325.07
8A	-505.52	-504.66
9A	121.03	121.34
10A	398.88	398.19
11A	127.97	127.48
12A	201.90	201.64
13A	109.58	108.64
14B	105.02	105.06
15B	-125.01	-124.86
16B	33.67	32.52
17B	101.77	103.00
18B	-426.23	-426.19
19B	115.53	115.52
20C	-97.12	-96.96
21C	187.65	186.61
22C	-280.42	-279.71
23C	413.69	413.92

Table 5.2 Tie Power Comparison at 80% Load

Tie	Model Power Flow	Actual Load Flow
1A	-108.63	-110.04
2A	-337.90	-337.33
3A	-168.08	-167.43
4A	-64.44	-65.17
5A	-39.73	-39.67
6A	-824.91	-825.28
7A	-1352.26	-1351.32
8A	-498.59	-498.07
9A	158.57	158.76
10A	332.76	332.34
11A	95.23	94.93
12A	233.96	233.80
13A	83.21	82.64
14B	46.77	46.80
15B	-137.92	-137.83
16B	135.96	135.26
17B	31.56	32.30
18B	-283.28	-283.26
19B	89.31	89.30
20C	-50.13	-50.03
21C	247.54	246.91
22C	-295.46	-295.03
23C	400.47	400.00

Table 5.3 Tie Power Comparison at 65% Load

Tie	Model Power Flow	Actual Load Flow
1A	-85.89	-84.98
2A	-257.19	-257.57
3A	-285.27	-285.69
4A	-98.46	-98.64
5A	-235.95	-235.90
6A	-711.26	-711.04
7A	-1274.83	-1275.45
8A	-516.99	-517.34
9A	176.71	176.59
10A	359.75	360.03
11A	70.55	70.75
12A	215.89	216.00
13A	148.08	148.46
14B	2.05	2.04
15B	-74.47	-74.53
16B	56.04	56.50
17B	54.62	54.14
18B	-167.03	-167.05
19B	27.33	27.34
20C	-31.79	-31.86
21C	181.83	182.24
22C	-311.37	-311.65
23C	391.50	391.81

Table 5.4 Tie Power Comparison at 40% Load

Tie	Model Power Flow	Actual Load Flow
1A	-69.20	-69.64
2A	-198.95	-198.77
3A	-463.23	-463.03
4A	-166.60	-166.52
5A	-229.90	-229.88
6A	-673.77	-673.89
7A	-1221.40	-1221.10
8A	-545.20	-545.04
9A	156.44	156.50
10A	390.99	390.86
11A	123.56	123.47
12A	193.28	193.23
13A	190.19	190.01
14B	-17.77	-17.77
15B	-39.99	-39.96
16B	32.06	31.84
17B	98.34	98.58
18B	-339.15	-339.14
19B	-35.27	-35.27
20C	23.60	23.63
21C	204.62	204.43
22C	-319.74	-319.61
23C	363.73	363.59

Table 5.5 Megawatt Rms Error

Tie	Rms Error
1A	1.44
2A	0.52
3A	0.67
4A	0.43
5A	0.064
6A	0.38
7A	0.97
8A	0.54
9A	0.19
10A	0.43
11A	0.44
12A	0.16
13A	0.59
14B	0.025
15B	0.94
16B	0.72
17B	0.77
18B	0.025
19B	0.0087
20C	0.10
21C	0.65
22C	0.44
23C	0.31

5.5 Shift Coefficients

The change of tie flows with respect to the change of net interchange flows is provided by differentiating Eq. (5.35) with respect to the individual net interchange powers of vector P^E.

Rewriting Eq. (5.35) we have

$$P^T = SC_G \; P^G + SC_E \; P^E \tag{5.38}$$

Equation (5.38) can be expanded to relate the tie power flowing through any tie m of area j. If the tie power of area j flowing through tie number m is defined as P_m^{Tj} and the coefficients of matrix SC_E are defined as ζ_m^i, then we can expand Eq. (5.38) as

$$P_m^{Tj} = \sum_n SC_{Gmn} \; P^{Gn} + \sum_i \zeta_m^i \; P^{Ei} \tag{5.39}$$

where $n = 1,2...NG$

$i = A,B...N$

NG = Total number of generators in the power pool

Taking the partial derivative of Eq. (5.39) with respect to P^{Ei} and P^{Ej} of areas i and j respectively,

$$\frac{\partial P_m^{Tj}}{\partial P^{Ei}} = \zeta_m^i \tag{5.40}$$

$$\frac{\partial P_m^{Tj}}{\partial P^{Ej}} = \zeta_m^j \tag{5.41}$$

5.6 Practical Determination of Shift Coefficients

The shift coefficients for the multiarea grid power system provided by the elements of the matrix SC_E are given by Table 5.6. As indicated previously, the matrix SC_E has the dimension (23X4), and is obtained from the tie power model determined at the base case 65% load.

Table 5.6 Shift Coefficients ζ

Tie	EA	EB	EC	ED
1A	-1.1015	-0.2428	-0.8514	-1.1087
2A	0.4865	0.5036	-0.0209	0.4903
3A	-0.3367	-0.0108	-0.3387	-0.3239
4A	0.0071	-0.1109	0.1233	0.0018
5A	-0.6826	-0.5991	-0.0779	-0.6882
6A	0.3197	0.4688	-1.1074	1.2780
7A	-0.5637	-0.2392	-0.3402	-0.5479
8A	-0.4829	-0.1242	-0.3745	-0.4672
9A	0.0972	-0.2890	0.4067	0.0768
10A	-0.1035	-0.4101	0.2945	-0.0916
11A	0.1226	0.1071	0.0107	0.1273
12A	0.1007	-0.0826	0.1817	0.1025
13A	-0.8627	-0.9705	0.0941	-0.8491
14B	0.1104	0.1047	0.0045	0.1116
15B	-0.4067	-0.6569	0.2354	-0.3919
16B	-0.6397	0.1819	-0.8349	-0.6264
17B	0.3830	-0.4556	0.8807	0.3410
18B	-0.2396	0.2632	-0.5134	-0.2290
19B	0.1652	0.1025	0.0619	0.1659
20C	0.0612	-0.3767	0.4122	0.0869
21C	-0.0902	-0.0227	-0.0583	-0.0993
22C	-0.3384	-0.0995	-0.2527	-0.3245
23C	0.5046	0.5284	-0.0070	0.4878

CHAPTER 6

OPTIMAL ECONOMIC DISPATCH

Ever since Public Service Electric and Gas Company and Philadelphia Electric Company entered into an agreement in 1928 to coordinate the operation of bulk power generation, there has been a growing trend, in both the United States and the rest of the world, towards coordinating the operations of groups of interconnected electric companies and their actual formation into power pools.

In the formation of the power pools, available options are 1) operation by a single-dispatch computer (single computer configuration), and 2) operation by a number of computers (multi-computer configurations). Advantages and disadvantages of each approach have been well documented (Happ, 1969). However, it may be worthwhile to note that multicomputer configurations provide:

1) flexibility of utilizing existing equipment through building block approaches,
2) flexibility for meeting special area control and computing requirements,
3) parallel computing capability,
4) increased computing function reliability,
5) local control of area computer.

Essentially, a multicomputer configuration consists of a hierarchy of computers which are linked to each other by communication channels. The purpose of the configuration is for the computers to work together in performing computing functions. Figure 6.1 shows a multicomputer configuration consisting of computers of member companies, also called areas, and a central computer at the next level, also called a pool computer. It may be noted that not all computers have to physically exist as separate equipments. Where one of the area computers has sufficient capability to act as a pool computer it may be so utilized.

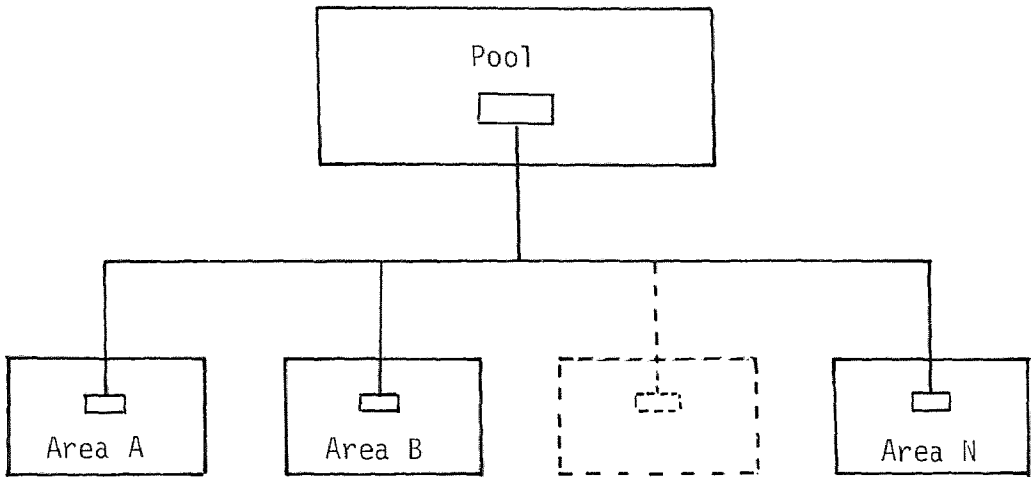

Fig. 6.1 Multicomputer Configuration Hierarchy for a Power Pool

6.1 A New Dispatch Technique

In Chapter 1 three basic methods currently used for the economic dispatch of power are briefly reviewed, viz. 1) the

pool boundary cost iteration method, 2) the pool lambda method, and 3) the pool base point and participation method. Due to the inherent difficiencies in these methods considerable benefit can be derived from formulating a new technique that minimizes the overall computational burden. This chapter develops the theory behind a new procedure and also demonstrates the practicality of such a procedure on the multiarea grid power system of Fig. 2.1. In the procedure, the solution algorithm developed is in a closed form rather than iterative, the computational burden is shared equally and without duplication between the pool computer and each of the area computers, direct control of generation is retained at the area level, and severe variations in the slope of the effective pool incremental cost curve, which are encountered in practice, will not adversely affect the solution.

The new technique is developed along the lines of the conventional techniques (Kirchmayer, 1959; Happ, 1969) except that the one additional explicit constraint equation is included in the derivation of the interarea coordination equations. This additional equation results in the definition of a common pool reference running cost, in terms of which the individual area running costs can be solved for explicitly, thus avoiding any need for an iterative solution (Fink, 1970, 1971). The solution provides a set of compensation factors relating each

area running cost to the common pool reference running cost. The compensation factors are functions only of tie-line flows and relative loss factors and as such can be provided explicitly. Application of these compensation factors to the incremental cost curves of the individual areas thus makes it possible to provide, on-line, without any overall dispatch calculation for the pool, a common pool effective incremental cost curve from which the desired economic generation for each area can be determined.

Under the new procedure, individual area computers would transmit their effective total incremental cost curves or that portion of their curves within a specified MW bandwidth of their current load to the central computer. The central computer would multiply each cost curve by the current compensation factor for that area, and combine the individual adjusted curves to get a total pool curve. This pool curve would then specify the pool incremental cost for the current pool load, and this pool cost curve would in turn indicate, from the adjusted curves, the MW load that should be carried by each area. At the same time, each area's running cost could be obtained by dividing the pool cost by each area's compensation factor. The procedure, thus, is non-iterative and provides directly an assigned load as well as a corrected running cost for each area.

6.2 Multiarea Formulation

In the multiarea formulation, the method of diakoptics

(Kron, 1963), better known as the "piecewise method", is used where the problem is first separated into its desirable component parts. In a multiarea grid power system, these component parts are the respective areas that comprise the pool. Separate loss models for each area of the pool, as discussed in Chapter 3, are required. Each tie explicitly appears in each area loss model. As such, the models are driven by area generator powers and tie powers. Both the total and incremental losses in the individual areas can be easily calculated given the generator and tie powers.

It should be noted that the individuality of each area's load center is maintained, i.e. the assumption of conforming load behavior is made at the area level and not at the pool level. This allows for a great deal more load flexibility than is allowed in the single area approach. However, the multiarea approach needs an additional model, the tie model, that provides the individual tie powers given the generator powers and the net interchange powers. This is due to the fact that in a power system the individual tie powers are generally not known. What is known and controllable is the summation of the tie flows leaving each area of the pool. The summation of the tie flows leaving each area has been defined in Chapter 4 as the net interchange flow for that area.

$$P^{Ek} = - \sum_{k} P^{Tk} \tag{6.1}$$

where P^{Ek} represents the net interchange power leaving area k and P^{Tk} represents the individual tie powers of area k.

6.3 Development of Coordination Equations

The problem of economic allocation of generation, assuming that the generators are committed, involves the economic dispatch of generators in areas A,B...N, in such a manner that the total fuel cost in the entire pool is minimum, but such that for each area the load plus losses plus net interchange are satisfied.

The total fuel cost F_t that is to be minimized can be expressed as follows:

$$F_t = \sum_{i} F_i \, (P^{Gi}) \qquad ; \; i = A,B,\ldots N \tag{6.2}$$

subject to the constraints:

$$f_i = D^i + L^i + P^{Ei} - P^{Gi} = 0 \qquad ; \; i = A,B\ldots N \tag{6.3}$$

$$f_R = \sum_{i} P^{Ei} = 0 \qquad ; \; i = A,B\ldots N \tag{6.4}$$

$$P^{Gi} = \sum_{m} P^{Gi}_{m} \qquad ; \; m = 1,2\ldots NG_i \tag{6.5}$$

where,

A,B...N represent the individual areas

F_t represents the total fuel cost in the pool

F_i represents the total fuel cost in area i

D^i represents the load in area i

L^i represents the transmission loss in area i

P^{Ei} represents the net interchange power leaving area i

P^{Gi} represents the total generation in area i

N_{Gi} represents the number of generators in area i

Following the classical approach of Lagrange for minimizing a function subject to specified constraints, a new constrained function is formed by multiplying each of the constraint equations individually by a set of undetermined coefficients and then adding them to the fuel cost function.

$$H = F_t + \sum_i \lambda_i f_i + \lambda_R f_R \quad ; \; i = A,B...N \tag{6.6}$$

where λ_i, λ_R are Lagrange multipliers.

A necessary condition for a minimum for the constrained Eq. (6.6) is that the partial derivative of H with respect to all independent variables vanish. Since the generator powers and net interchange powers are the only independent variables, it is only necessary to solve simultaneous partial differential equations.

$$\frac{\partial H}{\partial P_m^{Gi}} = 0 \quad ; \; \begin{matrix} i = A,B...N \\ m = 1,2,..NG_i \end{matrix} \tag{6.7}$$

$$\frac{\partial H}{\partial P^{Ei}} = 0 \quad ; \; i = A,B...N \tag{6.8}$$

For an N area power pool, Eqs. (6.7) and (6.8) in expanded form can be expressed as:

$$\frac{dF_A}{dP_m^{GA}} + \lambda_A \frac{\partial L_A}{\partial P_m^{GA}} = \lambda_A \qquad ; \; m = 1,2\ldots NG_A$$

$$\vdots \qquad\qquad\qquad\qquad\qquad\qquad\qquad\qquad\qquad\qquad (6.9)$$

$$\frac{dF_N}{dP_m^{GN}} + \lambda_N \frac{\partial L_N}{\partial P_m^{GN}} = \lambda_N \qquad ; \; m = 1,2\ldots NG_N$$

and

$$\lambda_A\left(1+ \frac{\partial L_A}{\partial P^{EA}}\right) + \lambda_B \frac{\partial L_B}{\partial P^{EA}} + \ldots + \lambda_N \frac{\partial L_N}{\partial P^{EA}} = \lambda_R$$

$$\vdots \qquad\qquad\qquad\qquad\qquad\qquad\qquad\qquad\qquad\qquad (6.10)$$

$$\lambda_A \frac{\partial L_A}{\partial P^{EN}} + \lambda_B \frac{\partial L_B}{\partial P^{EN}} + \ldots + \lambda_N \left(1+ \frac{\partial L_N}{\partial P^{EN}}\right) = \lambda_R$$

The set of Eqs. (6.9) are generally referred to as the intraarea equations, whereas the set of Eqs. (6.10) are referred to as the interarea equations. The total number of intraarea and interarea equations is equal to the total number of generator and net interchange powers. The λ unknowns are balanced by the constraint Eqs. (6.3) and (6.4).

6.4 Real Time Solution

When the intraarea, interarea and the constraint equations are satisfied, power is dispatched to each of the area load centers in the most economic manner possible.

The intraarea Eqs. (6.9) establish the basis for determining the running cost in the individual areas. Thus,

$$\lambda_A = \frac{dF_A}{dP_m^{GA}} \Big/ \left(1 - \frac{\partial L_A}{\partial P_m^{GA}}\right) \qquad ; \; m = 1,2 \ldots NG_A$$

$$\vdots \qquad\qquad\qquad\qquad\qquad\qquad\qquad\qquad\qquad\qquad (6.11)$$

$$\lambda_N = \frac{dF_N}{dP_m^{GN}} \Big/ \left(1 - \frac{\partial L_N}{\partial P_m^{GN}}\right) \qquad ; \; m = 1,2 \ldots NG_N$$

It should be noted that in Eq. (6.11) additional loss terms included by Kirchmayer (1959) are properly excluded, since holding net interchange variables constant for partial differentiation with respect to the generator powers precludes the possibility of the transmission loss L_j in area j ($j \neq i$) varying with the generator power P_m^{Gi} of area i.

The interarea Eqs. (6.10) can be simultaneously solved for the individual area running costs λ_i in terms of the common reference cost λ_R. Thus,

$$\frac{\lambda_i}{\lambda_R} = \frac{\eta_i}{\eta} \qquad ; \; i = A,B\ldots N \tag{6.12}$$

where,

$$\eta_i = \text{Det} \begin{array}{c} \begin{array}{ccccc} A & \ldots & i & \ldots & N \end{array} \\ \begin{vmatrix} 1 + \frac{\partial L_A}{\partial P^{EA}} & \ldots & 1 & \ldots & \frac{\partial L_N}{\partial P^{EA}} \\ \vdots & & \vdots & & \vdots \\ \frac{\partial L_A}{\partial P^{Ei}} & \ldots & 1 & \ldots & \frac{\partial L_N}{\partial P^{Ei}} \\ \vdots & & \vdots & & \vdots \\ \frac{\partial L_A}{\partial P^{EN}} & \ldots & 1 & \ldots & 1 + \frac{\partial L_N}{\partial P^{EN}} \end{vmatrix} \end{array} \tag{6.13}$$

$$\eta = \text{Det} \begin{vmatrix} 1 + \frac{\partial L_A}{\partial P^{EA}} & \ldots & \frac{\partial L_i}{\partial P^{EA}} & \ldots & \frac{\partial L_N}{\partial P^{EA}} \\ \vdots & & \vdots & & \vdots \\ \frac{\partial L_A}{\partial P^{Ei}} & \ldots & 1 + \frac{\partial L_i}{\partial P^{Ei}} & \ldots & \frac{\partial L_N}{\partial P^{Ei}} \\ \vdots & & \vdots & & \vdots \\ \frac{\partial L_A}{\partial P^{EN}} & \ldots & \frac{\partial L_i}{\partial P^{EN}} & \ldots & 1 + \frac{\partial L_N}{\partial P^{EN}} \end{vmatrix} \tag{6.14}$$

The ratio λ_i/λ_R is defined as the participation factor of area i. The reciprocal of the participation factor is defined as the compensation factor (γ_i) for area i.

$$\gamma_i = \eta/\eta_i \tag{6.15}$$

The compensation factor γ_i relates the running cost λ_i of area i to the common pool reference running cost λ_R. With the knowledge of the elements of the determinants η_i and η we can determine the compensation factors. These compensation factors can be applied to individual area running cost curves obtained by Eqs. (6.11) to form one composite cost curve for the entire power pool. Once the composite cost curve is obtained it becomes possible to dispatch power to the individual areas, taken as a whole, in the same manner as individual generators are dispatched within a single area.

6.5 Area Running Cost Curves

The running costs of individual areas are provided by the solution of Eqs. (6.11). The intraarea equation for area i can be written as

$$\lambda_i = \frac{dF_i}{dP_m^{Gi}} \Big/ \left(1 - \frac{\partial L_i}{\partial P_m^{Gi}}\right) \qquad ; \; m = 1,2\ldots NG_i \tag{6.16}$$

In Eq. (6.16) the term $\frac{dF_i}{dP_m^{Gi}}$ represents the incremental fuel cost

of generator m of area i in \$/MWhr. The incremental fuel cost as a function of the generator output P_m^{Gi} can be represented by a piecewise linear function

$$\frac{dF_i}{dP_m^{Gi}} = \varepsilon_o + \varepsilon\ P_m^{Gi} \tag{6.17}$$

where ε represents the slope of the fuel cost curve and ε_o the intercept as shown in Fig. 6.2.

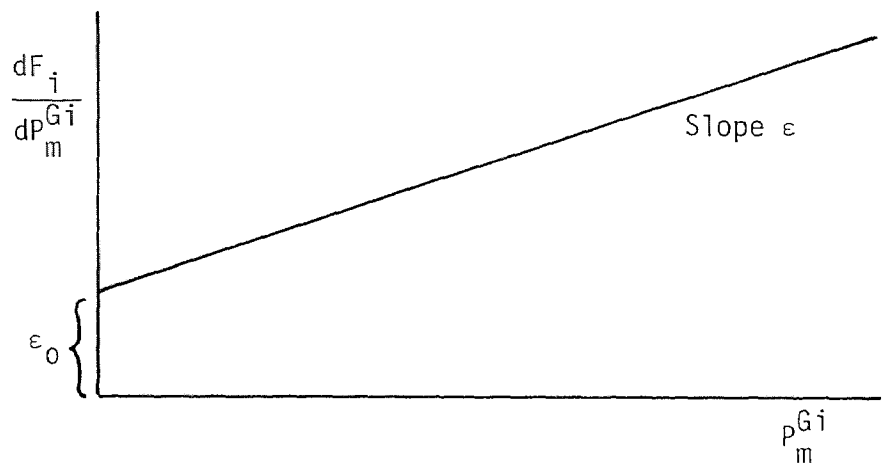

Fig. 6.2 Incremental Fuel Cost Curve of a Typical Generator

The loss factor $\frac{\partial L_i}{\partial P_m^{Gi}}$ has been previously defined in Chapter 4, section 3.3, as

$$\frac{\partial L_i}{\partial P_m^{Gi}} = \alpha_m^i \tag{6.18}$$

Substituting Eqs. (6.17) and (6.18) in Eq. (6.16) we have

$$\lambda_i = (\varepsilon_o + \varepsilon\ P_m^{Gi}) \Big/ (1 - \alpha_m^i) \tag{6.19}$$

In any area i containing $m = NG_i$ generators there are NG_i such equations. For different values of λ_i these equations are solved providing the individual generator powers P_1^{Gi}, P_2^{Gi}, ... $P_{NG_i}^{Gi}$ of generators $1,2,\ldots NG_i$. The summation of all the generator powers P^{Gi} of area i is plotted against λ_i, to obtain the running cost curve. Similarly, curves for all other areas can be obtained.

6.6 Practical Determination of Area Running Cost Curves

Application of the loss factors α given by Tables 3.3, 3.4, 3.5 and 3.6 for areas A,B,C and D respectively and the constants ε and ε_0 for the generators given by Table 6.1 on Eq. (6.19) provides the individual area running cost curves given by Fig. 6.3, 6.4, 6.5 and 6.6 for areas A,B,C and D.

Table 6.1 Incremental Fuel Cost Curve Constants ε and ε_o

Area	Generator	ε	ε_o
A	G1	.00001	.10500
A	G2	.00000	.10475
A	G3	.00000	.10275
B	G1	-.10144	3.89225
B	G2	.00001	.34312
B	G3	.38025	-4.55589
B	G4	.00000	.00000
B	G5	.00001	.30679
B	G6	-.51751	14.07714
B	G7	.00002	.30905
B	G8	.00001	.01849
C	G1	.62431	-4.48446
C	G2	.00003	.37805
C	G3	.15156	-4.12100
C	G4	.00001	.37185
C	G5	.00002	.38175
C	G6	.00001	.36449
C	G7	.74716	-13.54675
C	G8	.00003	.34754
D	G1	-3.02141	52.28364
D	G2	.47163	-11.36517
D	G3	.00003	.31601
D	G4	-.15243	6.91678

Area	Generator	ε	ε_o
D	G5	-.73093	20.98641
D	G6	-.11885	6.58094
D	G7	.00002	.25930
D	G8	.00002	.30687
D	G9	.00001	.30107
D	G10	.00003	.28690
D	G11	-.09397	4.57457
D	G12	1.48531	-40.65985
D	G13	-7.78203	150.41167
D	G14	.00002	.31578
D	G15	-1.42171	37.47343
D	G16	.00001	.43215
D	G17	-2.62712	62.11155
D	G18	.00002	.45320

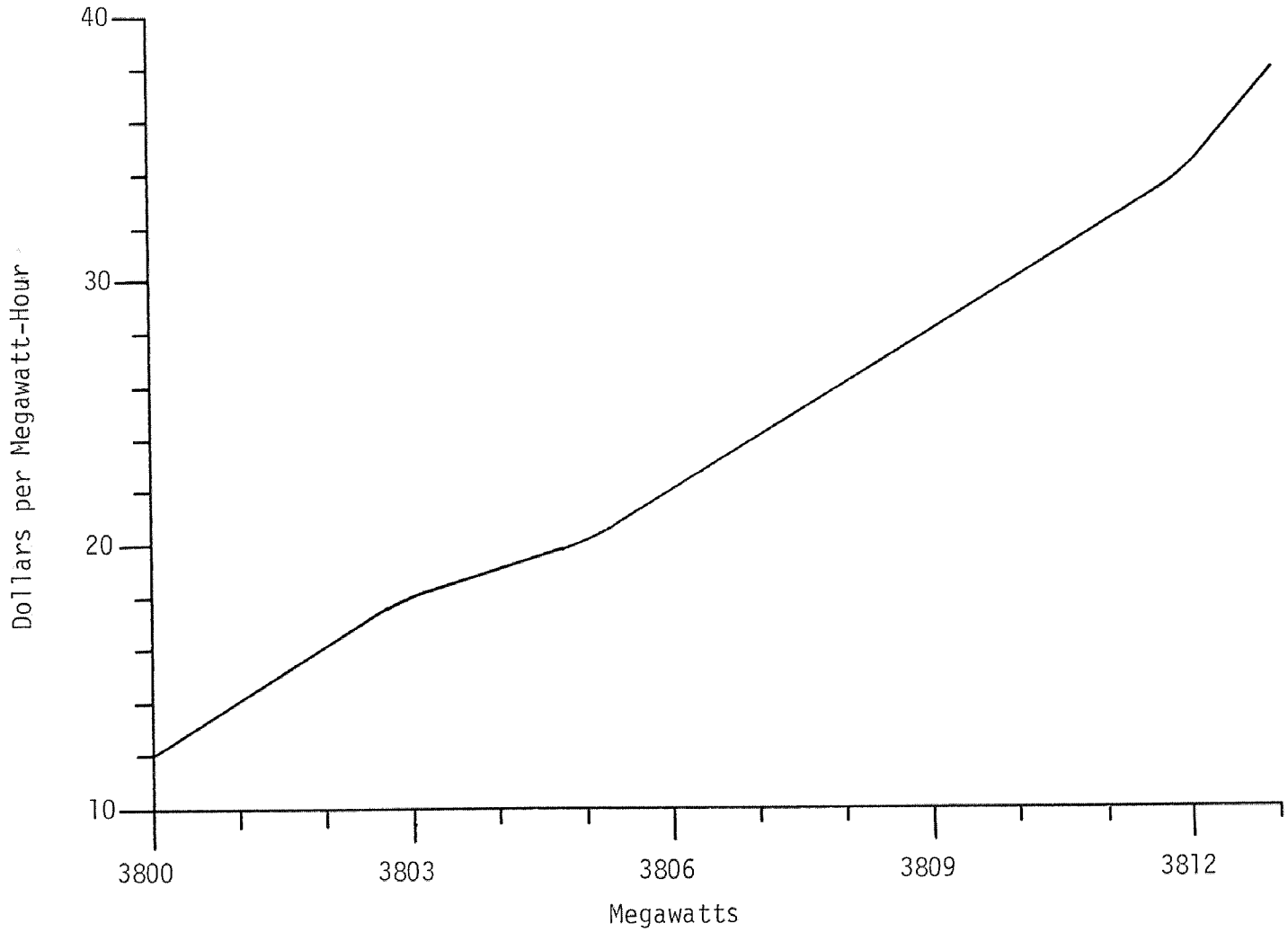

Fig. 6.3 Area A Running Cost Curve

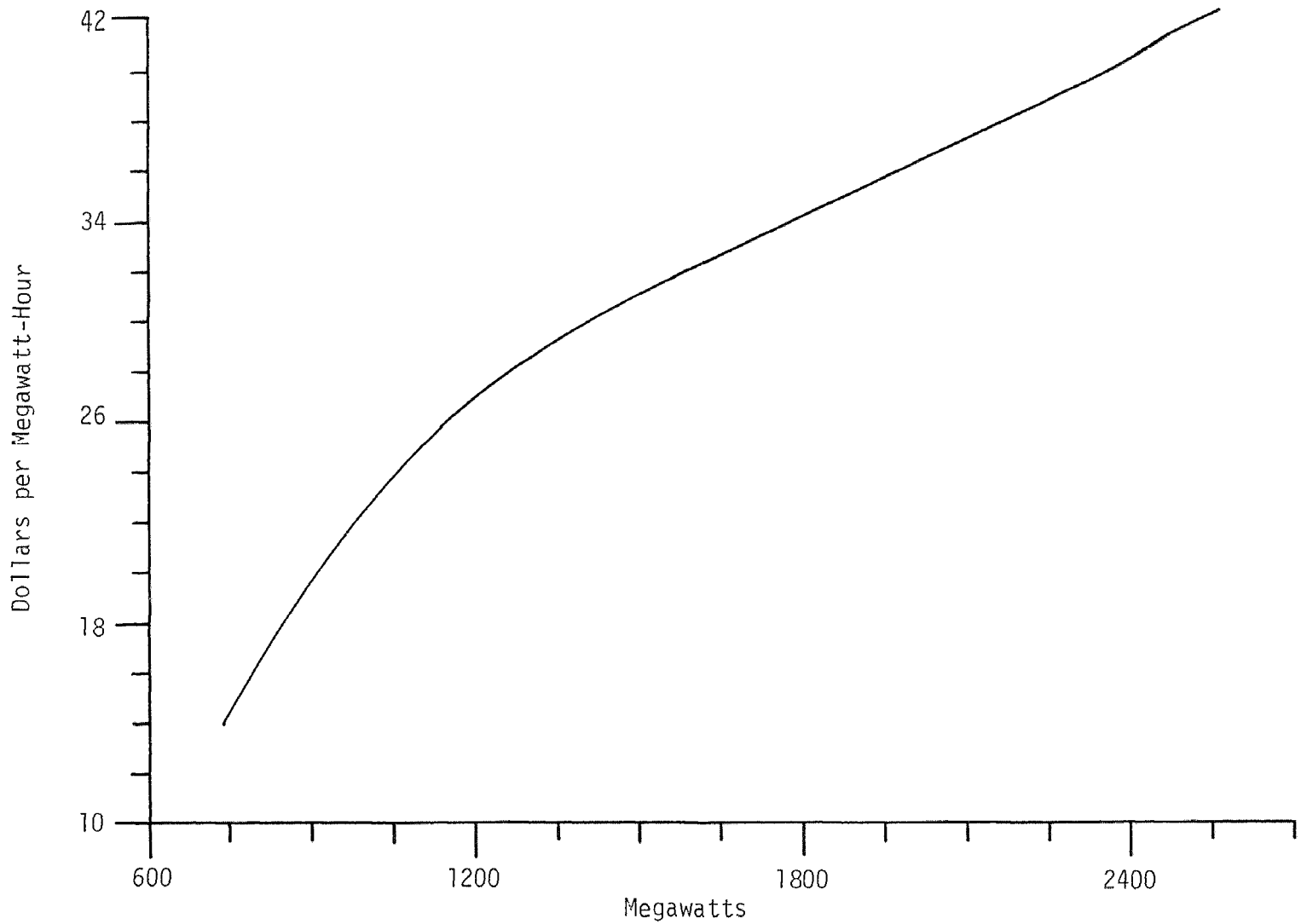

Fig. 6.4 Area B Running Cost Curve

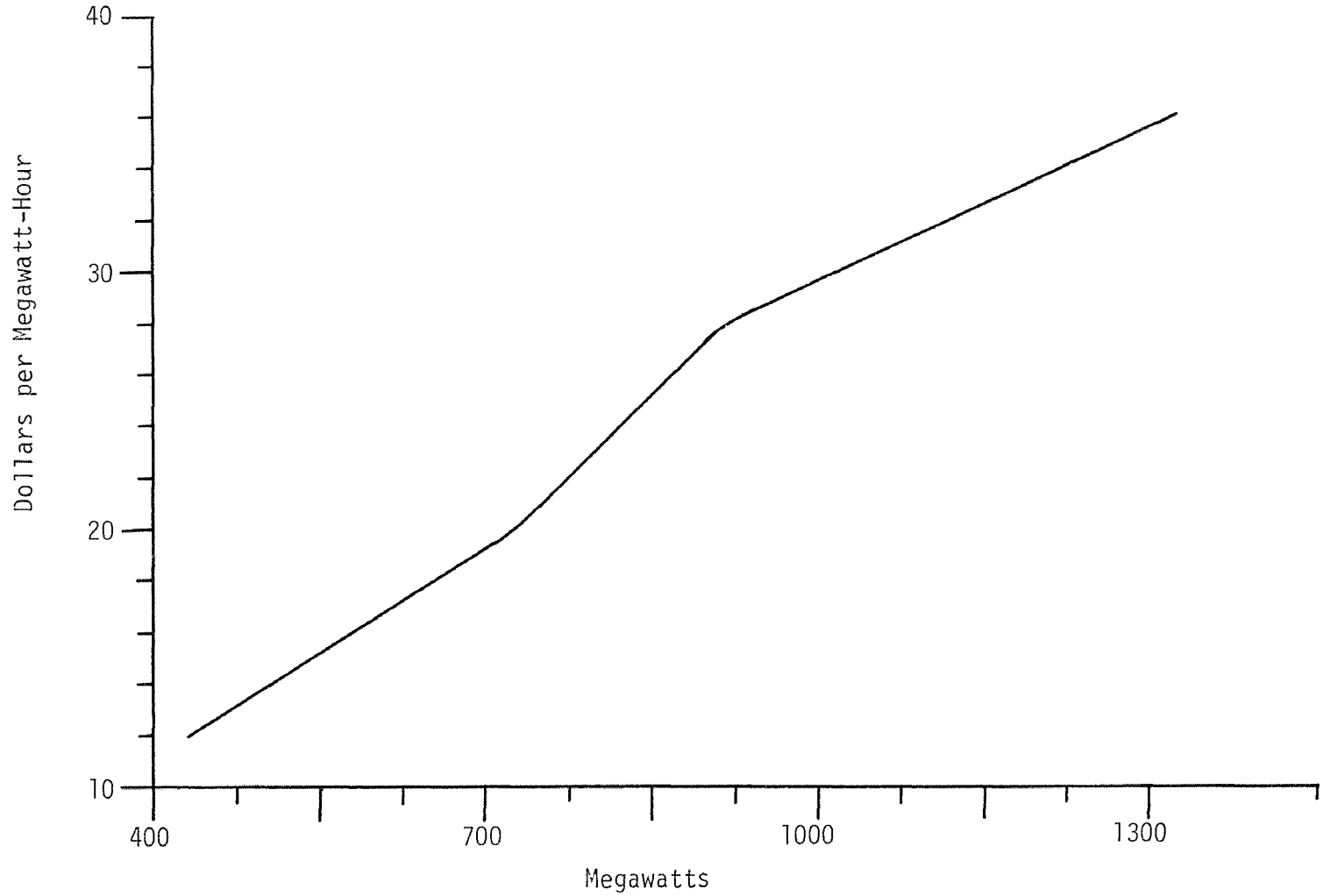

Fig. 6.5 Area C Running Cost Curve

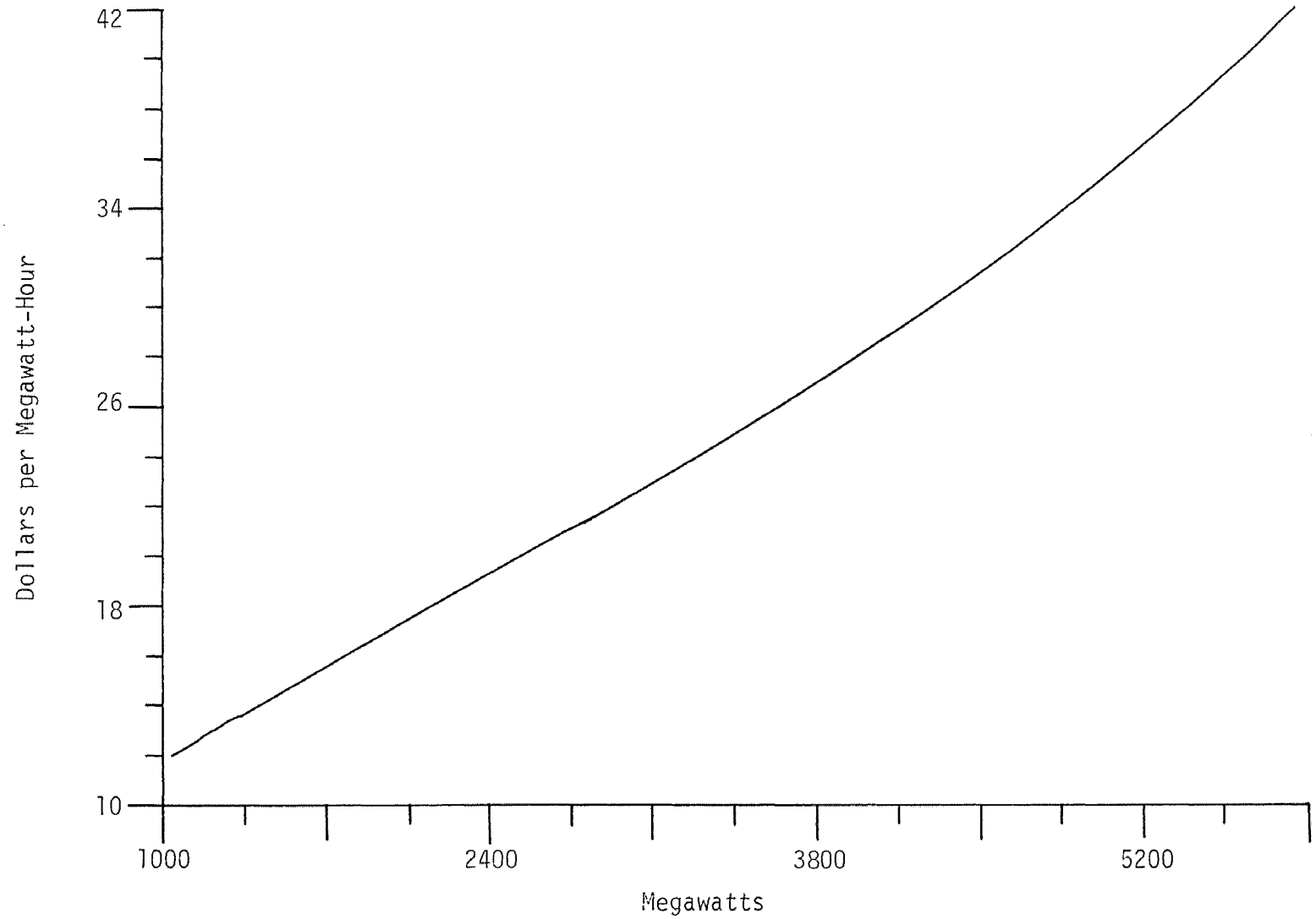

Fig. 6.6 Area D Running Cost Curve

6.7 Determination of Compensation Factors

The partial derivative of the transmission loss L_j of area j with respect to the net interchange of area j can be expressed as

$$\frac{\partial L_j}{\partial P^{Ej}} = \sum_m \frac{\partial L_j}{\partial P_m^{Tj}} \frac{\partial P_m^{Tj}}{\partial P^{Ej}} \quad ; \; m = 1,2,\ldots NT_j \tag{6.20}$$

and the partial derivative of the transmission loss L_j of area j with respect to the net interchange of area i can be expressed as

$$\frac{\partial L_j}{\partial P^{Ei}} = \sum_m \frac{\partial L_j}{\partial P_m^{Tj}} \frac{\partial P_m^{Tj}}{\partial P^{Ei}} \quad ; \; m = 1,2,\ldots NT_{ij} \tag{6.21}$$

where, NT_j represents the total number of ties of area j

NT_{ij} represents the total number of ties connecting area i with area j

The loss factor $\frac{\partial L_j}{\partial P_m^{Tj}}$ has been defined in Chapter 3, section 3.3 as

$$\frac{\partial L_j}{\partial P_m^{Tj}} = \beta_m^j \tag{6.22}$$

The shift coefficients $\frac{\partial P_m^{Tj}}{\partial P^{Ej}}$ and $\frac{\partial P_m^{Tj}}{\partial P^{Ei}}$, the partial derivatives of individual tie powers of area j with respect to the net interchange of area j and area i respectively have been defined in Chapter 5, section 5.5 as

$$\frac{\partial P_m^{Tj}}{\partial P^{Ej}} = \zeta_m^j \tag{6.23}$$

$$\frac{\partial P_m^{Tj}}{\partial P^{Ei}} = \zeta_m^i \tag{6.24}$$

Substituting Eq. (6.22) and (6.23) in Eq. (6.20) we have

$$\frac{\partial L_j}{\partial P^{Ej}} = \sum_m \beta_m^j \zeta_m^j \tag{6.25}$$

Let $\sum_m \beta_m^j \zeta_m^j = \omega_{jj}$ (6.26)

Then $\frac{\partial L_j}{\partial P^{Ej}} = \omega_{jj}$ (6.27)

Similarly substituting Eq. (6.22) and (6.24) in Eq. (6.21) we have

$$\frac{\partial L_j}{\partial P^{Ei}} = \sum_m \beta_m^j \zeta_m^i \tag{6.28}$$

Let $\sum_m \beta_m^j \zeta_m^i = \omega_{ji}$ (6.29)

Then $\frac{\partial L_j}{\partial P^{Ei}} = \omega_{ji}$ (6.30)

Given, ω_{ji} and ω_{jj}, the determinants η_i and η can be calculated.

6.8 Practical Determination of Compensation Factors

The ω_{ji} constants for the multiarea grid power system calculated at 100, 80, 65 and 40% load conditions are given by Table 6.2. For each load condition the constants ω_{ji} were substituted in Eqs. (6.13) and (6.14) to obtain the participation factors (λ_i/λ_R). The resultant participation factors are tabulated

in Table 6.3. The reciprocal of the participation factors provide the compensation factors γ_i. Figures 6.7, 6.8, 6.9 and 6.10 provide the percentage deviation of the compensation factors from the base case 65% load conditions for areas A,B,C and D respectively.

Table 6.2 Loss Factors ω

% Load	Area	E_A	E_B	E_C	E_D
100	A	.06200	.00183	.07931	.04286
100	B	.09169	.04483	.04683	.09171
100	C	-.05859	-.06270	.00429	-.05879
100	D	-.05322	-.04174	.02138	-.08608
80	A	.06005	.00341	.07544	.04125
80	B	.08405	.03786	.04617	.08407
80	C	-.02187	-.02522	.00353	-.02204
80	D	-.03704	-.03869	.02874	-.06413
65	A	.06218	.00409	.07707	.04319
65	B	.06024	.02675	.03346	.06026
65	C	-.03897	-.04229	.00351	-.03915
65	D	-.02341	-.03493	.03325	-.04513
40	A	.06518	.00377	.08070	.04587
40	B	.04691	-.01039	.05727	.04695
40	C	-.02999	-.03297	.00313	-.03015
40	D	.00276	-.01989	.04354	-.01812

Table 6.3 Participation Factors $1/\gamma$

% Load	Area A	Area B	Area C	Area D
100	0.9483	1.0464	0.8508	0.9994
80	0.9138	1.0169	0.8536	0.9570
65	0.9355	1.0387	0.8577	0.9746
40	0.9130	1.0535	0.8220	0.9507

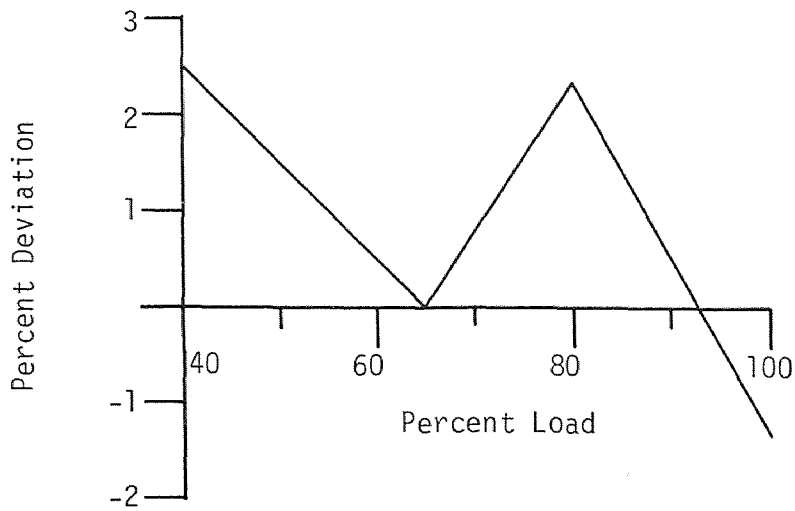

Fig. 6.7 Percent Deviation of Area A Compensation Factors

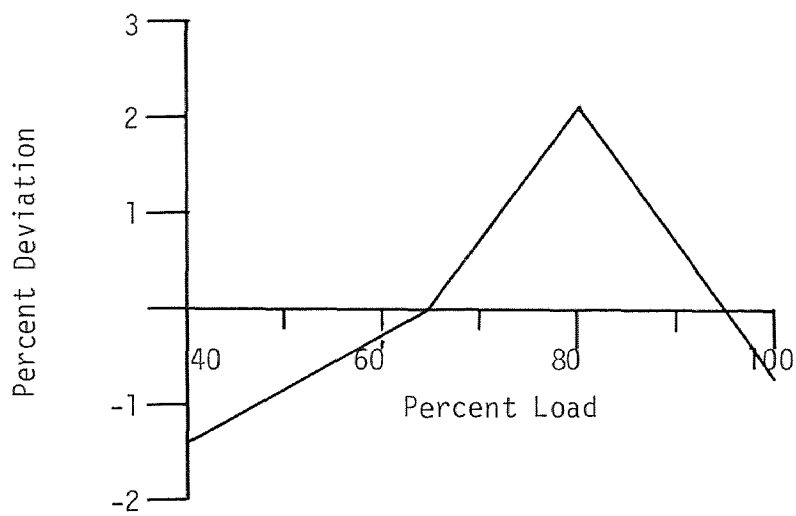

Fig. 6.8 Percent Deviation of Area B Compensation Factors

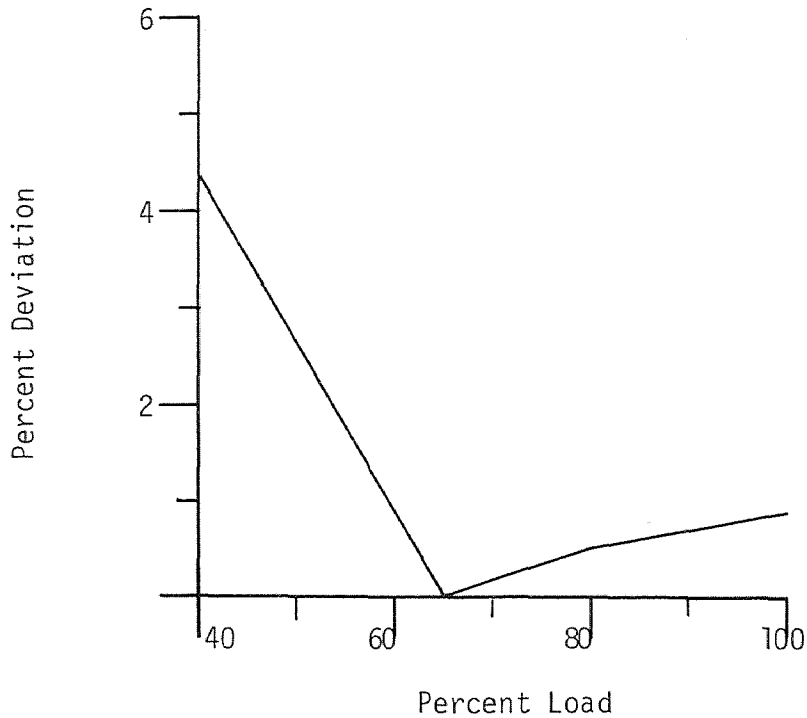

Fig. 6.9 Percent Deviation of Area C Compensation Factors

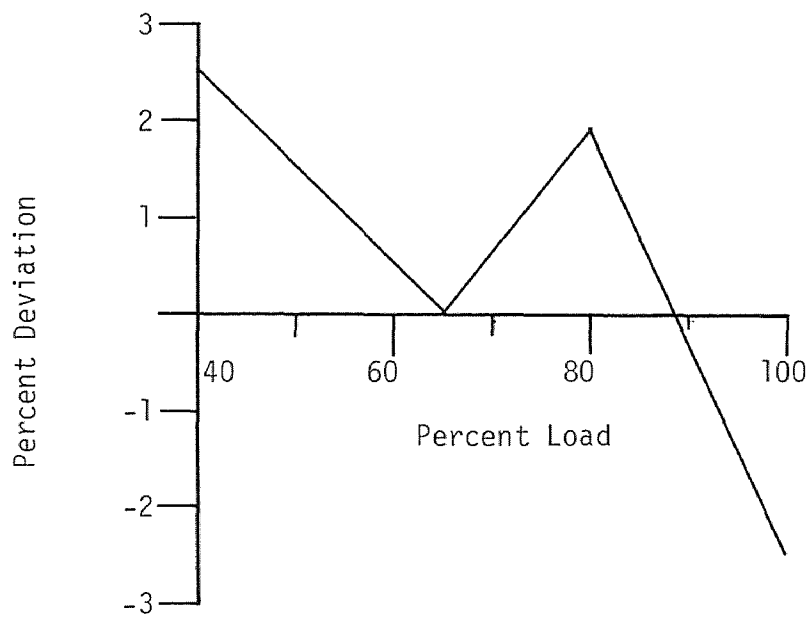

Fig. 6.10 Percent Deviation of Area D Compensation Factors

6.9 Practical Determination of Pool Cost Curve

The individual area running cost curves of Figs. 6.3, 6.4, 6.5 and 6.6 can be multiplied by the compensation factors to obtain the adjusted running cost curves of areas A,B,C and D given by Figs. 6.11, 6.12, 6.13 and 6.14. It should be noted that the compensation factors determined at different load conditions were appropriately applied. For example, the compensation factors determined at 100% load conditions were applied to the individual area running cost curves in the bandwidth of 90 to 100% load. Similarly, the compensation factors determined at 80% load conditions were applied to the individual area running cost curves in the bandwidth of 75 to 90% load and so on.

Once the adjusted running cost curves are determined a pool running cost curve can be obtained as follows. The individual area generations are determined for a specific $/MWh reference cost from the adjusted running cost curves. The summation of the area generations represents the total pool generation at the specified reference cost. For different pool cost values total pool generation can be determined. Figure 6.15 provides such a pool running cost curve. Also, the individual area generation for a given pool generation can be plotted as shown in Fig. 6.16. This curve gives the MW dispatch requirement for any area for a specified pool generation.

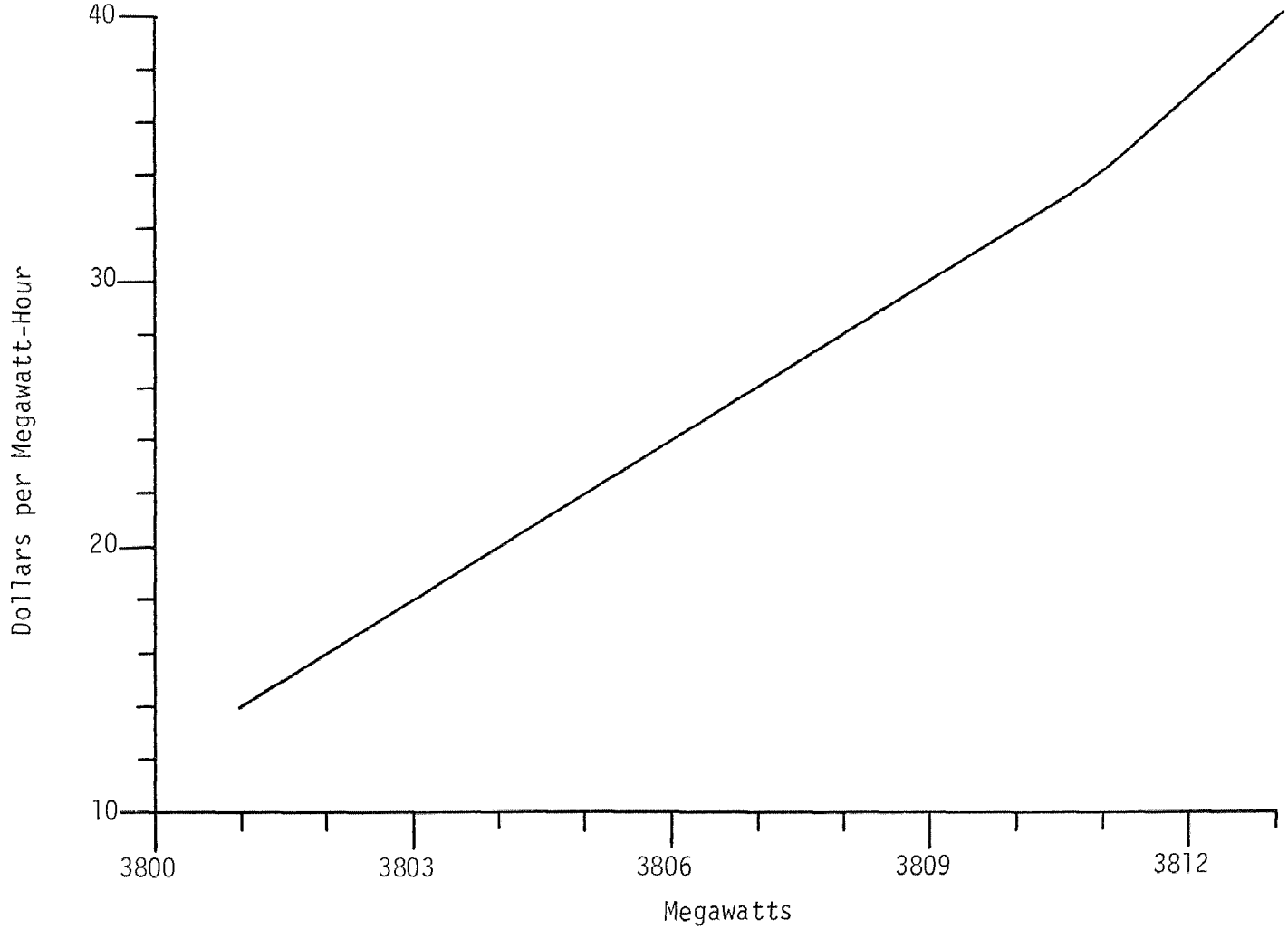

Fig. 6.11 Area A Adjusted Running Cost Curve

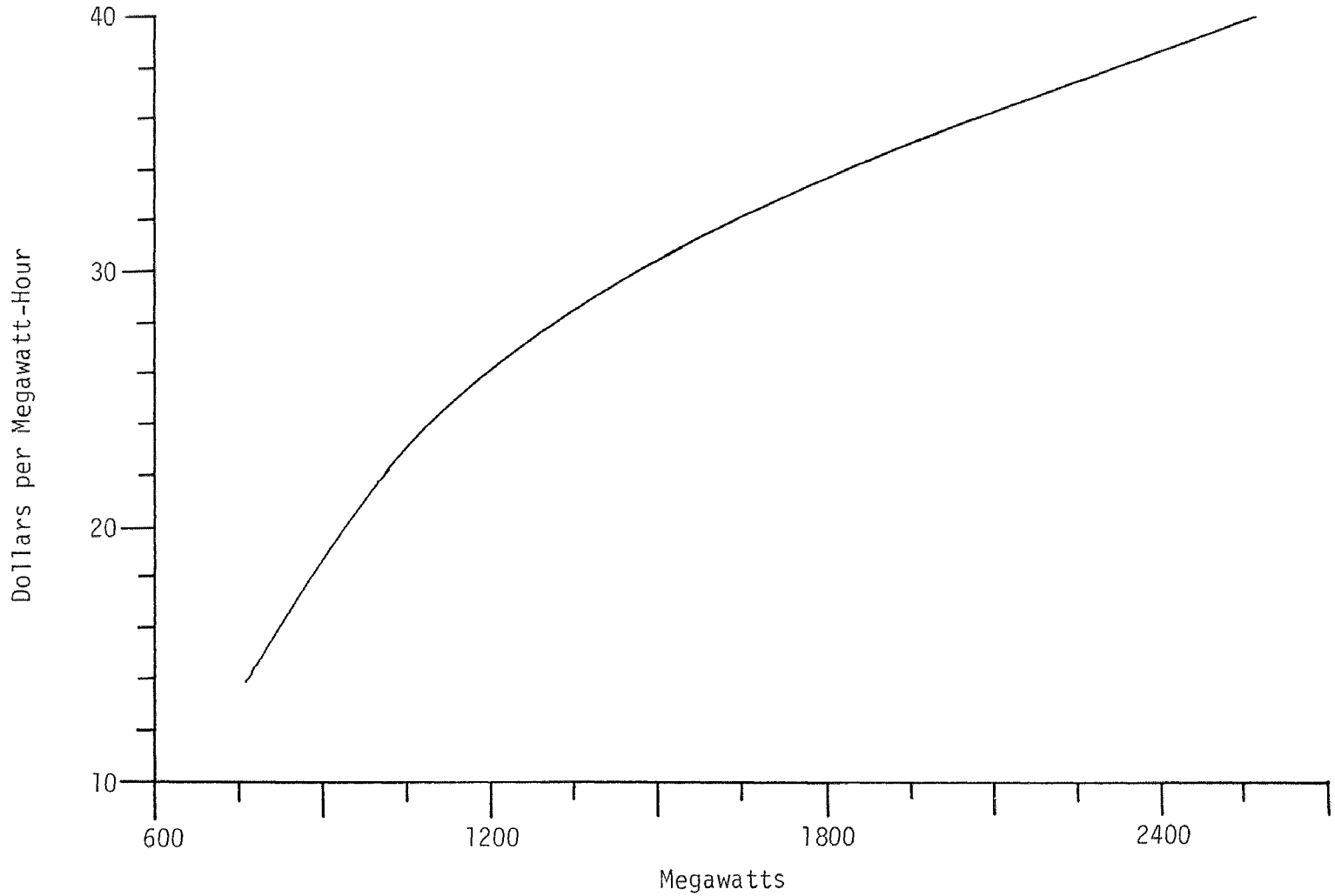

Fig. 6.12 Area B Adjusted Running Cost Curve

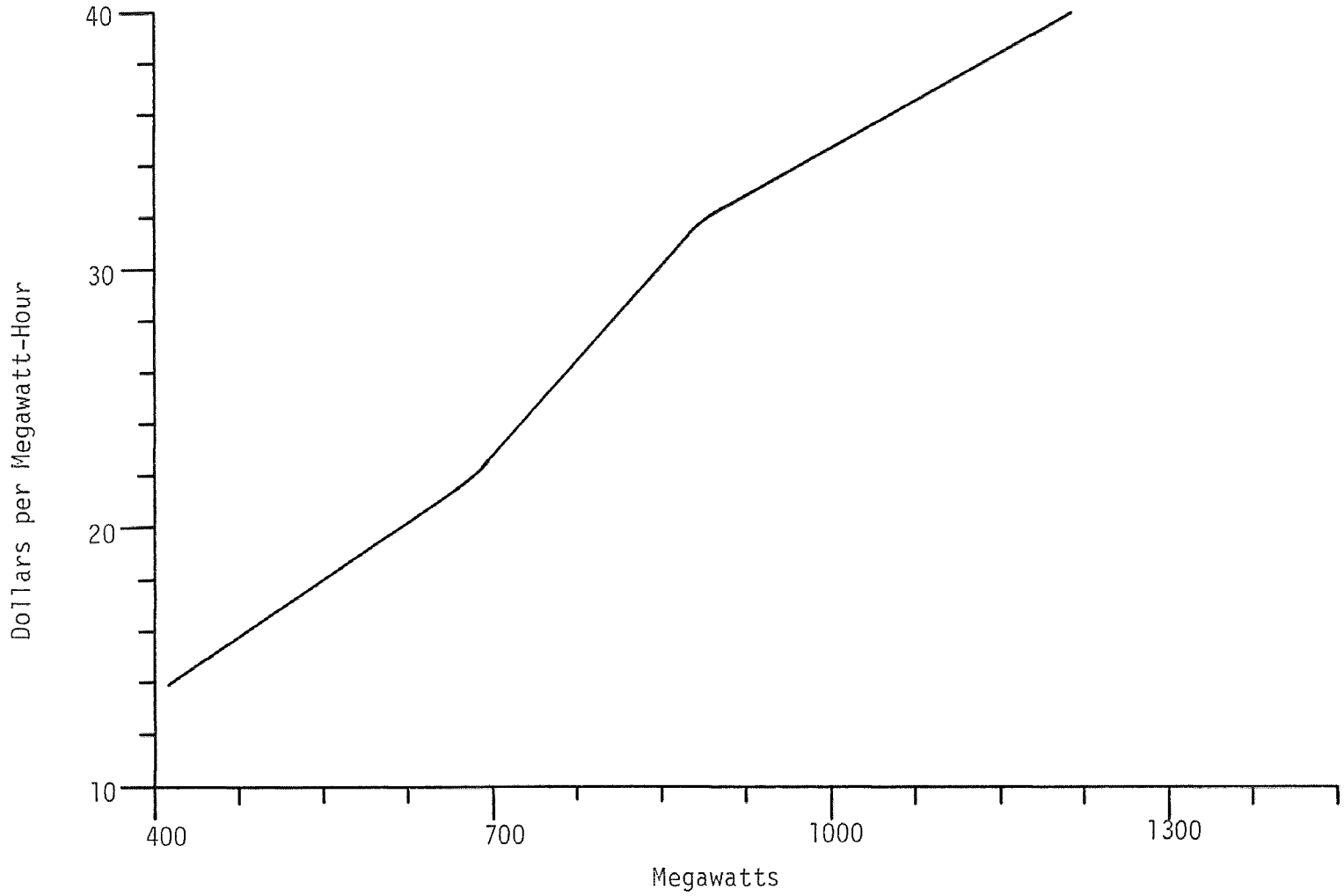

Fig. 6.13 Area C Adjusted Running Cost Curve

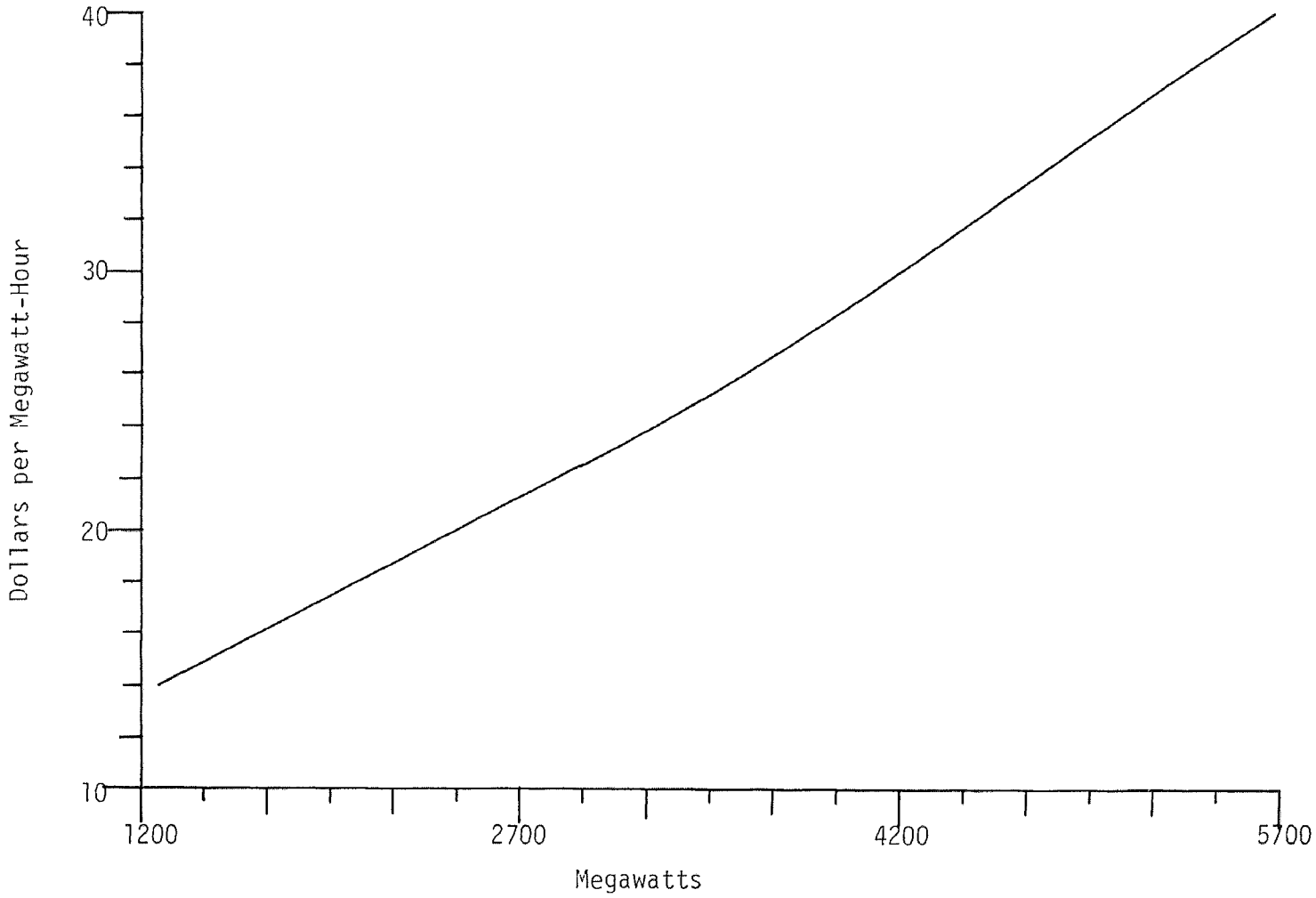

Fig. 6.14 Area D Adjusted Running Cost Curve

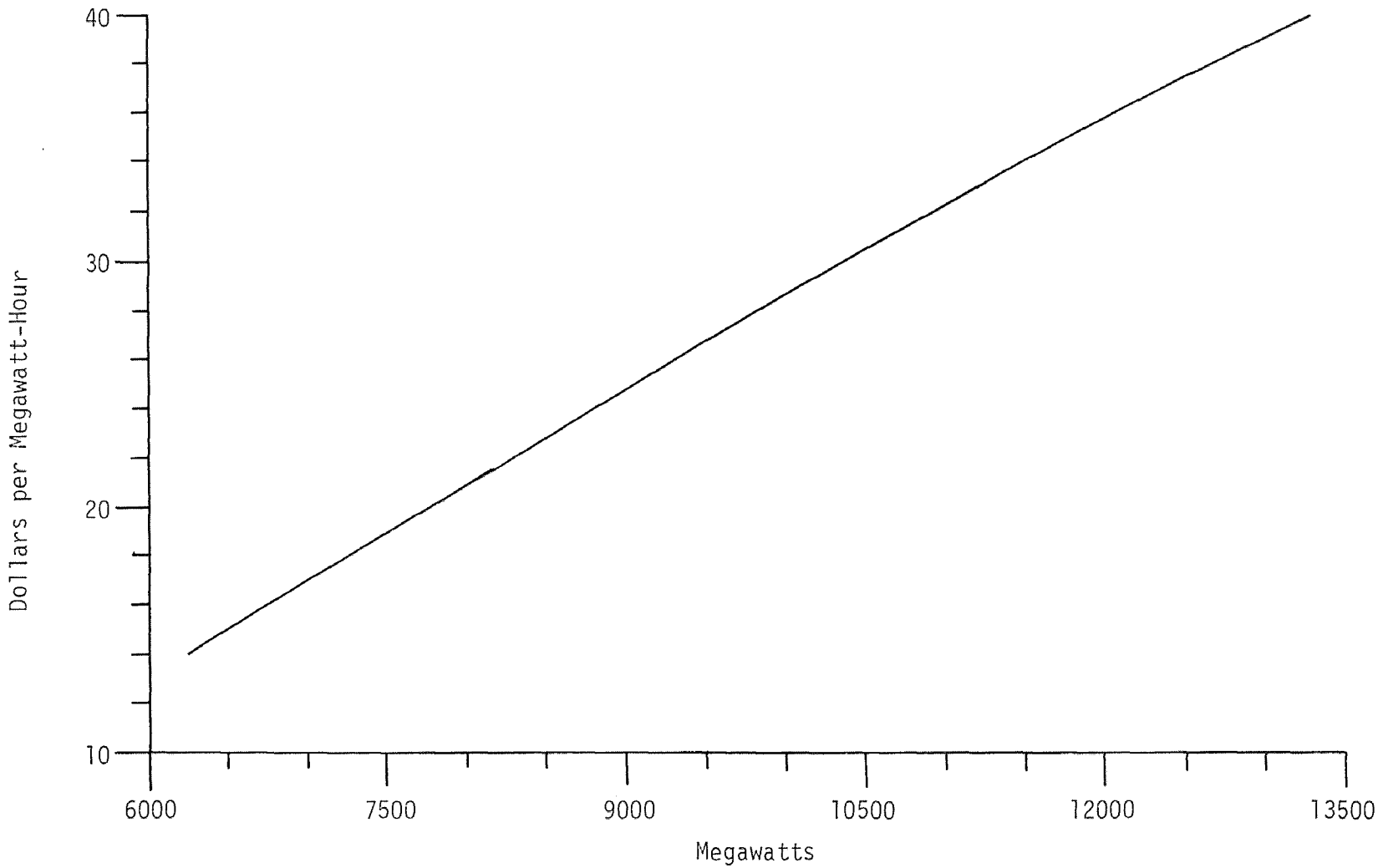

Fig. 6.15 Pool Running Cost Curve

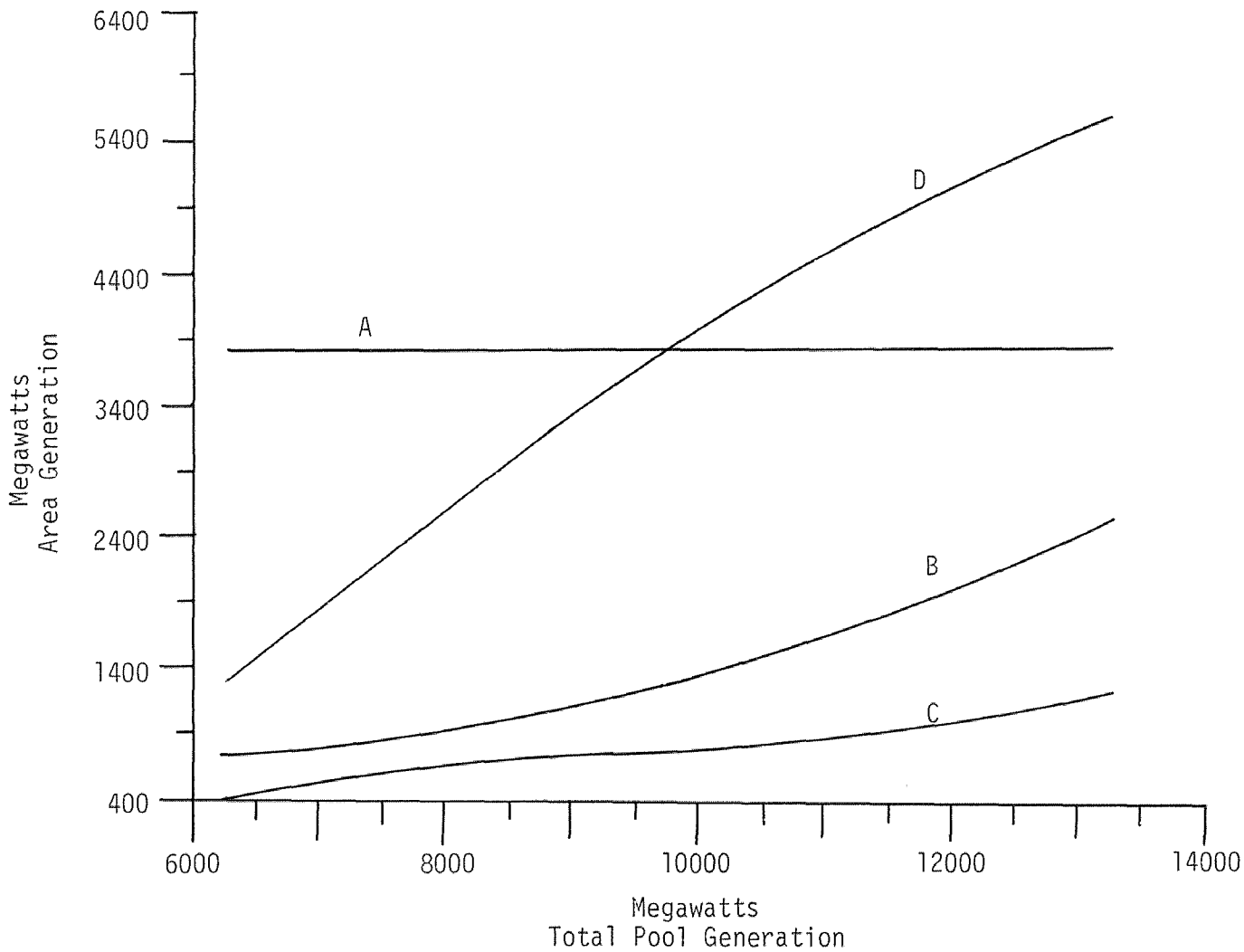

Fig. 6.16 Generation Schedule for the Power Pool

CHAPTER 7

DESIGN CRITERION FOR OPTIMUM POWER SYSTEMS

Electrical power systems are generally represented in conventional form in the first reference frame in terms of data related to actual generating sources, loads and impedances of the interconnecting network. However, where prompt and decisive action is needed in comparing several power systems of different configurations under a unified constraint, identification of optimum power systems using actual first reference frame data can increase the computer burden tremendously and can be prohibitive in certain large scale systems. On the other hand, system representation in the power or the sixth reference frame generally results in a much smaller equivalent network than the actual network due to the fact that in the sixth reference frame the system load buses are not present. Thus, an analysis of several power system alternatives in the power reference frame is preferable.

In this chapter a procedural method of selecting and designing an acceptable optimum multiarea grid power system configuration from a group of system alternatives in terms of a generalized symmetrical conductance (G)-matrix is presented.

7.1 Development of a Generalized Transmission Loss Model

Chapter 3, shows how individual loss models can be obtained. Just as area impedance models are interconnected in Chapter 4 so

can the area loss models be interconnected. The composite loss model in reference frame 6.1 can be expressed as:

$$B_{6.1-6.1} = \begin{array}{c} \begin{bmatrix} B1^A & & & B2^A & & \\ & B1^B & & & B2^B & \\ & & \vdots & & & \vdots \\ & & B1^N & & & B2^N \\ B3^A & & & B4^A & & \\ & B3^B & & & B4^B & \\ & & \vdots & & & \vdots \\ & & B3^N & & & B4^N \end{bmatrix} \end{array} \begin{array}{c} GA \\ GB \\ \vdots \\ GN \\ TA \\ TB \\ \vdots \\ TN \end{array} \qquad (7.1)$$

where GA, GB... represents the generator axes of areas A,B... respectively. TA, TB... represents the tie axes of the respective areas.

In a compounded form Eq. (7.1) can be expressed as

$$B_{6.1-6.1} = \begin{bmatrix} B_{G-G} & B_{G-T} \\ B_{T-G} & B_{T-T} \end{bmatrix} \begin{array}{c} G \\ T \end{array} \qquad (7.2)$$

$$B_{G-G} = \begin{bmatrix} B1^A & & & \\ & B1^B & & \\ & & \vdots & \\ & & & B1^N \end{bmatrix} \qquad (7.3a)$$

$$B_{G-T} = \begin{bmatrix} B2^A & & & \\ & B2^B & & \\ & & \vdots & \\ & & & B2^N \end{bmatrix} \tag{7.3b}$$

$$B_{T-G} = \begin{bmatrix} B3^A & & & \\ & B3^B & & \\ & & \vdots & \\ & & & B3^N \end{bmatrix} \tag{7.3c}$$

$$B_{T-T} = \begin{bmatrix} B4^A & & & \\ & B4^B & & \\ & & \vdots & \\ & & & B4^N \end{bmatrix} \tag{7.3d}$$

The transmission loss is given by

$$L_{6.1-6.1} = \left[P^{6.1}\right]^T \left[B_{6.1-6.1}\right] \left[P^{6.1}\right] \tag{7.4}$$

where the power vector $P^{6.1}$ in a compounded form is expressed as

$$P^{6.1} = \begin{bmatrix} P^G \\ P^T \end{bmatrix} \tag{7.5}$$

In Chapter 5, section 5.3, a relationship between the tie powers and the generator and net interchange powers is developed. Recalling Eq. (5.30),

$$P^T = \begin{bmatrix} SC_G & SC_{Ek} \end{bmatrix} \begin{bmatrix} P^G \\ P^{Ek} \end{bmatrix} \tag{7.6}$$

Substituting Eq. (7.6) in (7.5) we have

$$\begin{bmatrix} P^G \\ \\ P^T \end{bmatrix} = \begin{bmatrix} 1 & 0 \\ \\ SC_G & SC_{Ek} \end{bmatrix} \begin{bmatrix} P^G \\ \\ P^{Ek} \end{bmatrix} \tag{7.7}$$

The above transformation is of the form

$$P^{6.1} = C^{6.1}_{6.4}\, P^{6.4} \tag{7.8}$$

The transmission loss matrix in reference frame 6.1 transformed to reference frame 6.4 is given by

$$B_{6.4-6.4} = \left[C^{6.1}_{6.4}\right]_t \left[B_{6.1-6.1}\right] \left[C^{6.1}_{6.4}\right] \tag{7.9}$$

In an expanded form it can be expressed as

$$B_{6.4-6.4} = \begin{bmatrix} B_1 & B_2 \\ \\ B_3 & B_4 \end{bmatrix} \tag{7.10}$$

where

$$B_1 = B_{G-G} + B_{G-T}SC_G + SC_G B_{T-G} + SC_G B_{T-T} SC_G \tag{7.11a}$$

$$B_2 = B_{G-T}\, SC_{Ek} + SC_G B_{T-T} SC_{Ek} \tag{7.11b}$$

$$B_3 = SC_{Ek} B_{T-G} + SC_{Ek} B_{T-T} SC_G \tag{7.11c}$$

$$B_4 = SC_{Ek} B_{T-T} SC_{Ek} \tag{7.11d}$$

7.2 Reduction of the Generalized Transmission Loss Model

The vector P^G in Eq. (7.7) contains as many generator powers as there are generators in the entire power pool. These individual generator powers can be expressed in terms of the net generation of each area. Thus, the NG generator powers can be eliminated in terms of N net generation powers as

$$P^G = d \quad P^{TG} \tag{7.12}$$

where P^{TG} represents the total generation vector.

The elements of the matrix d represent the ratios of area generator powers to the total generation of the respective areas.

Adding the net interchange powers P^{Ek} on both sides of Eq. (7.12) we have

$$\begin{bmatrix} P^G \\ P^{Ek} \end{bmatrix} = \begin{bmatrix} d & 0 \\ 0 & 1 \end{bmatrix} \begin{bmatrix} P^{TG} \\ P^{Ek} \end{bmatrix} \tag{7.13}$$

The above transformation is of the form

$$P^{6.4} = C^{6.4}_{6.5} \; P^{6.5} \tag{7.14}$$

The transmission loss matrix in reference frame 6.5 is given by

$$B_{6.5-6.5} = \begin{bmatrix} C^{6.4}_{6.5} \end{bmatrix}_t \begin{bmatrix} B_{6.4-6.4} \end{bmatrix} \begin{bmatrix} C^{6.4}_{6.5} \end{bmatrix} \tag{7.15}$$

or in the expanded form

$$B_{6.5-6.5} = \begin{bmatrix} dB_1 d & dB_2 \\ B_3 d & B_4 \end{bmatrix} \tag{7.16}$$

7.3 Basis for Design Criterion

In the traditional development of transmission loss coefficients given by Eq. (3.28), if θ_{mn} is small and also $S_m - S_n$ is small the term $H_{mn}(f_m - f_n)$ is negligible. Therefore, the transmission loss coefficients can be expressed as

$$B_{mn} = K_{mn} R_{mn}$$

or (7.17)

$$R_{mn} = K_{mn}^{-1} B_{mn}$$

If the elements of the transmission loss matrix $B_{6.5-6.5}$ are divided by the corresponding K parameters, the resistance matrix in reference frame 3.5 can be obtained as

$$R_{3.5-3.5} = \begin{bmatrix} dB_1 d/K_1 & dB_2/K_2 \\ B_3 d/K_3 & B_4/K_4 \end{bmatrix} \tag{7.18}$$

The generalized conductance matrix is given by the inverse of the (R)-matrix. Thus

$$G_{3.5-3.5} = \left[R_{3.5-3.5} \right]^{-1} \tag{7.19}$$

The design criterion for an optimum power system of an arbitrary interconnected multiarea network subject to the constraints of minimum transmission losses, specified total received load, and specified plant capacity can be based on

the calculation of the symmetrical conductance matrix obtained from the power flow reference frame since the knowledge of the conductance matrices of more than one interconnecting network could serve as the basis for identifying the nature and type of the optimum power system, i.e., whether it be a centralized system, a dispersed system or a mixed centralized-dispersed system as far as the locations of the power generating sources are concerned.

The diagonal elements of the conductance (G)-matrix have a great significance since they represent the equivalent conductance of each area with respect to the centroid of the system and the self conductance of the net interchange variables represent the mutual conductance between the areas, and hence can serve as a justified basis for comparing more than one optimum power system. Once an optimum (G)-matrix is identified based on constraints set by the power pool members, through reverse transformation, the actual network in reference frame one can be obtained for design purposes.

7.4 Practical Calculation of the Symmetrical Conductance Matrix

The reference frame 6.4 transmission loss matrix for the base case 65% load is obtained by the application of Eqs.(7.11) on the individual area (B)-matrices and the connection matrices. The resultant matrix had a dimension of (40X40) representing 37 generators and 3 net interchanges. The individual area

generator powers are next eliminated in terms of the net generation of each area using the d matrix shown in Table 7.1, to obtain the transmission loss matrix in reference frame 6.5.

The (K)-matrix elements are obtained by taking the weighted average of the load flow parameters i.e. voltage, phase angle and Q/P ratios of the individual components of which they are formed. For instance the K element of the net generation of area A is formed by taking the weighted average of the voltages, phase angles and the Q/P ratios of the individual generators of area A. The (K)-matrix elements of the net interchange powers of the individual areas are obtained as defined in Chapter 5, section 5.2 Eqs. (5.18) and (5.19).

The transmission loss matrix elements in reference frame 6.5 are divided by the corresponding K elements to obtain the resistance matrix in reference frame 3.5 given by Table 7.2.

The inverse of the resistance matrix $R_{3.5-3.5}$ provides the generalized conductance (G)-matrix given by Table 7.3.

Table 7.1 Coefficients of the d Matrix

Area	Generator	EA	EB	EC	ED
A	G1	.8937	.0000	.0000	.0000
A	G2	.0647	.0000	.0000	.0000
A	G3	.0415	.0000	.0000	.0000
B	G1	.0000	.0904	.0000	.0000
B	G2	.0000	.0000	.0000	.0000
B	G3	.0000	.0000	.0000	.0000
B	G4	.0000	.0000	.0000	.0000
B	G5	.0000	.0000	.0000	.0000
B	G6	.0000	.3370	.0000	.0000
B	G7	.0000	.0000	.0000	.0000
B	G8	.0000	.5724	.0000	.0000
C	G1	.0000	.0000	.5843	.0000
C	G2	.0000	.0000	.0000	.0000
C	G3	.0000	.0300	.0000	.0000
C	G4	.0000	.0000	.0000	.0000
C	G5	.0000	.0000	.0000	.0000
C	G6	.0000	.0000	.0000	.0000
C	G7	.0000	.0000	.3856	.0000
C	G8	.0000	.0000	.0000	.0000
D	G1	.0000	.0000	.0000	.1632
D	G2	.0000	.0000	.0000	.0000
D	G3	.0000	.0000	.0000	.0000
D	G4	.0000	.0000	.0000	.0485

Area	Generator	EA	EB	EC	ED
D	G5	.0000	.0000	.0000	.0808
D	G6	.0000	.0000	.0000	.0317
D	G7	.0000	.0000	.0000	.0000
D	G8	.0000	.0000	.0000	.0000
D	G9	.0000	.0000	.0000	.0000
D	G10	.0000	.0000	.0000	.0000
D	G11	.0000	.0000	.0000	.0334
D	G12	.0000	.0000	.0000	.0000
D	G13	.0000	.0000	.0000	.2648
D	G14	.0000	.0000	.0000	.0000
D	G15	.0000	.0000	.0000	.1482
D	G16	.0000	.0000	.0000	.0404
D	G17	.0000	.0000	.0000	.1158
D	G18	.0000	.0000	.0000	.0727

Table 7.2 Coefficients of the Symmetrical Resistance Matrix

Between Buses	Coefficients	Between Buses	Coefficients
TGA TGA	0.41221417E-02	TGA TGB	0.98663126E-03
TGA TGC	0.75359940E-02	TGA TGD	0.47322772E-02
TGA EB	0.10366160E-01	TGA EC	0.91633163E-02
TGA ED	0.17615338E-03	TGB TGB	0.14943732E-02
TGB TGC	0.23904666E-02	TGB TGD	0.57280645E-03
TGB EB	0.36952570E-02	TGB EC	0.80831930E-04
TGB ED	0.42611136E-04	TGC TGC	0.68632483E-01
TGC TGD	0.17828651E-01	TGC EB	0.89905261E-02
TGC EC	0.39076507E-02	TGC ED	0.84970355E-03
TGD TGD	0.60364790E-02	TGD EB	0.16521455E-02
TGD EC	0.13901715E-02	TGD ED	0.56690942E-04
EB EB	0.46324939E-01	EB EC	0.16813586E-02
EB ED	0.40695443E-03	EC EC	0.14700696E-02
EC ED	0.30593061E-03	ED ED	0.74897566E-03

Table 7.3 The Generalized Conductance Matrix

	TGA	TGB	TGC	TGD	EB	EC	ED
TGA	-11.68	-5.68	-8.48	-8.28	7.87	-107.80	52.43
TGB	-5.68	874.80	-31.55	-36.63	-65.22	13.12	119.70
TGC	-8.48	-31.55	65.14	196.40	1.35	-54.81	-66.92
TGD	-8.28	-36.63	196.40	797.70	5.96	-254.90	-182.40
EB	7.87	-65.22	1.35	5.96	24.45	21.64	-29.68
EC	-107.80	13.12	-54.81	-254.90	21.64	65.30	69.14
ED	52.43	119.70	-66.92	-182.40	-29.68	69.14	140.70

CHAPTER 8

DISCUSSION

In this chapter a brief discussion on 1) the improved tie modelling procedure, 2) optimal economic dispatch, and 3) optimal design criterion is provided.

8.1 The Improved Tie Modelling Procedure

The current tie modelling procedures (Happ, 1971, 1975, 1976) rigorously eliminate the circulating and sneak currents to form a complex tie current model. This tie current model is then projected in the power reference frame yielding a complex tie power model. While the complex tie model provides both real and reactive powers of the ties, given generator and net interchange powers, the formation of such a model involves the manipulation of complex current and impedance matrices which for systems with multiplicity of ties can require tremendous computer memory and also tremendous computer time for solution. The procedure developed herein alleviates this problem by directly forming the real tie power model from actual system impedances. It should be noted that only the real tie power model is necessary for economic dispatch of power and for the development of the generalized conductance matrix used for design criterion. Therefore, the calculation of the reactive tie power model can be avoided, thereby saving both computer time and memory requirement. The tie model

obtained from the base case load flow data has shown great accuracy in predicting the tie powers at all loads. This is evident by inspecting Tables 5.1, 5.2, 5.3 and 5.4. Moreover, as Table 5.5 shows, the maximum Rms error that occurred in one of the tie lines is 1.44 megawatts, which is acceptable.

8.2 The Optimal Economic Dispatch

The dispatch technique demonstrated for a multiarea grid power system represents improvement over the existing dispatch methods. First of all, the problem now solved by the central computer is the same as the problems heretofore solved by the area computers. The central computer accesses information pertaining to individual areas only as a whole i.e. the composite incremental cost curve of each area, the total generation within each area, and the tie line flows between areas. This eliminates any duplication of effort between the central computer and the area computers. At the same time, the mathematical representation of the system as used by the central computer and by the area computers is consistent, assuring overall accuracy to the degree provided by the governing assumptions.

Secondly, both the desired generation within each area and the associated running cost for that area are provided explicitly. These companies whose internal dispatch systems can accept a desired MW input can thus avoid the severe inaccuracies and un-

certainties that result from operating over the nearly flat portions of current incremental cost curves, and provide instead the accuracy inherent in MW dispatch. The running cost is returned to its proper function as a catalytic tool for achieving an optimum economic balance among available sources of generation, and is relieved of the burden, which it is ill-suited to carry, of serving an additional control function. At the same time, companies whose dispatch systems are predicated on a running cost input can continue to operate in this fashion with the added assurance that the signal being supplied to them now reflects the true pool running cost and any inaccuracy due to the use of lambda as a dispatch signal will not adversely affect the operation of the other companies.

8.3 The Optimal Design Criterion

The procedural method developed herein to analyze arbitrary networks of different configurations under specified constraints can be a very economic tool since the size of the generalized conductance matrix is very small, (2N-1)X(2N-1) for an N area system. In essence, the actual network of the multiarea grid system that could consist of hundreds of transmission lines (elements) and load, tie and generator buses (nodes) is reduced to a hypothetical network of (N+1) nodes and (2N-1) elements. The multiarea grid power system of Fig. 2.1 can be represented by Fig. 8.1.

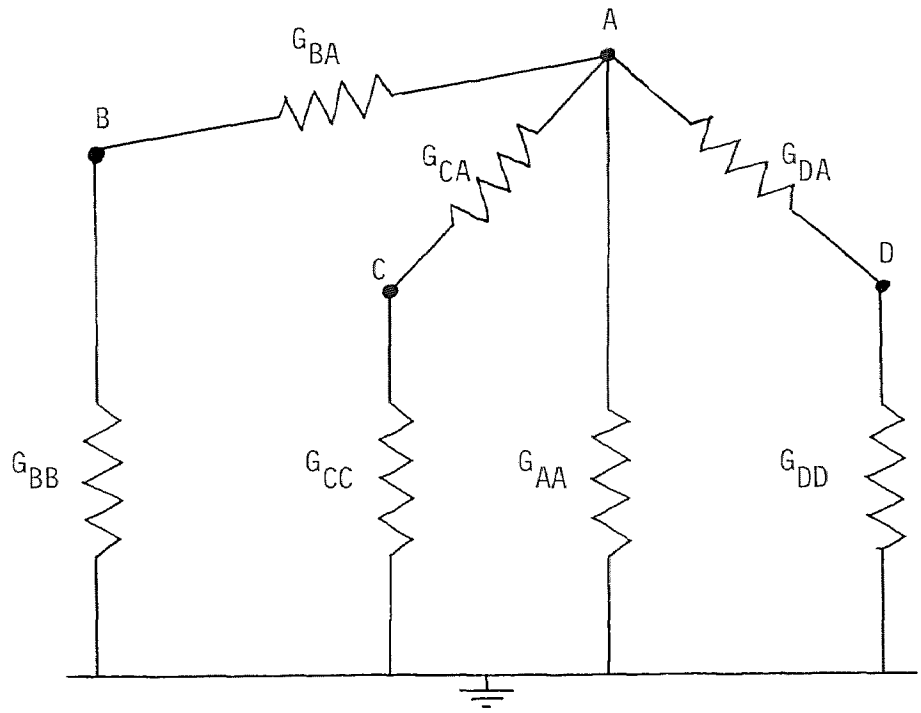

Fig. 8.1 Power System Representation in Reference Frame 3.5

The diagonal elements of the (G)-matrix corresponding to the net generation represent the equivalent conductance of the individual areas with respect to the centroid of the system. For instance, G_{BB} in Fig. 8.1 is 874.80, the element in the second row and second column in Table 7.3. The diagonal elements corresponding to the net interchange represent the mutual coupling between the areas. For instance G_{CA} in Fig. 8.1 is 65.30, the element in sixth row and sixth column of Table 7.3. Inspection of the (G)-matrix can enable one to analyze the power system. For example, if we compare

G_{BA} = 24.45 with G_{DA} = 140.70, it is evident that area D is strongly connected to area A while area B is weakly connected to area A.

The (G)-matrix thus can be very useful in design. For instance, if the pool members decide to change the strength of the net interchange between two areas, the appropriate element of the (G)-matrix can be modified. By a series of reverse transformations it is possible to design a new network in reference frame one.

CHAPTER 9

CONCLUSIONS

Improved procedure for modelling tie power flows between interconnected multiarea grid power systems has been presented and application thereof demonstrated for use in real time as well as planning purposes. The modelling procedure first eliminates the tie flows in terms of circulating flows and sum flows. The sum flows are then eliminated in terms of net interchange and sneak flows. The circulating and sneak flows are finally eliminated directly in the power reference frame using the actual impedances, unlike the current method which requires the elimination of such variables by first eliminating the sneak and circulating currents and the subsequent formation of a complex tie current model and finally the complex tie power model. Consequently, manipulation of large complex current, complex power and complex impedance matrices is avoided. This is particularly important where system information is necessary only in terms of real power, such as in the process of the economic dispatch of real power, where significant savings in both computer time and memory can be realized.

Under the current tie modelling procedures, the model is driven by the generator powers and all but the reference area net interchange powers. Since the coefficients of the model

represent the change of the individual tie flows with respect to the change of the generator and net interchange powers, due to the absence of the reference area terms in the model, the current modelling procedures cannot be used for the improved lambda dispatch method developed in this research. This deficiency is corrected in the improved tie model developed by this research where the model is driven by all area generator and net interchange powers.

Tables 5.1, 5.2, 5.3 and 5.4 show the predicted tie powers of the 23 ties at 100, 80, 65 and 40% load conditions from the tie power model obtained from the base case 65% load. The results show that the average error in predicting the tie flows is less than 1MW, which is of the order of 1%. From the standpoint of both planning and operating procedures, the model has shown great accuracy in predicting tie flows at all loading conditions.

Improved method of on-line optimal economic dispatch of power in a multiarea grid power system has been presented and demonstrated. The method is a modification of the pool lambda dispatch method, wherein the solution algorithm is in a closed form rather than iterative, the computational burden is shared equally and without duplication between the central pool computer and each of the area computers, direct control of generation is retained at the area level, and severe variations in the slope of effective pool incremental cost curve, will not adversely affect the solution.

Improvement in the pool lambda method is achieved by the enlargement of the required set of coordination equations and the corresponding constraints resulting in the definition of a common reference cost for the power pool, in terms of which the individual area running costs can be solved explicitly, without resorting to iterative techniques. The solution provides a set of compensation factors relating each area running cost to the common pool reference running cost. The compensation factors are functions of tie line flows and relative loss factors are easily provided explicitly. Application of these compensation factors to the incremental cost curves of the individual areas makes it possible to provide, on line, without any overall dispatch calculation for the entire power pool, a common pool effective incremental cost curve from which the desired economic generation for each area can be determined.

Under the procedure, individual areas would transmit their effective total incremental cost curve, including transmission losses, or that portion of their curve within a specified MW bandwidth of their current load to the central pool computer. The central pool computer would multiply each cost curve by the current compensation factor for that area, and combine the individual adjusted curves to get a total pool cost curve. This pool cost curve would then specify the pool incremental cost for the current pool load, and this pool cost in turn

would indicate, from the adjusted curves, the MW load that should be carried by each area. At the same time, each area's running cost could be obtained by dividing the pool cost by each area's compensation factor. The procedure is thus non-iterative and provides directly an assigned load as well as a corrected running cost for each area.

The improved procedure ameliorates several deficiencies of the current economic dispatch methods. Formally the problem now solved by the central pool computer is the same as the problems heretofore solved by the individual area computers. The central computer accesses information pertaining to individual areas only as a whole i.e. the composite-incremental cost curve, the total generation and the net interchange flows. This eliminates any duplication of effort between the central computer and the area computers. Both the desired generation within each area and the associated running cost for that area are explicitly provided. Thus, electric utilities whose internal dispatch systems can accept a desired MW input can avoid the severe inaccuracies and uncertainties that result from operating over the nearly flat portions of current incremental cost curves, and provide instead the accuracy inherent in MW dispatch. The running cost as such is returned to its proper function as a catalytic tool for achieving an optimum economic balance among available generating sources, and is

relieved of the burden of serving as a control function which is not well defined for it. At the same time, electric utilities whose dispatch systems are predicated on a running cost input can continue to operate in this fashion with the added assurance that the signal being received now reflects the true pool running cost and so any inaccuracy due to the use of lambda as a dispatch signal will not adversely affect the operation of the entire power pool.

Application of the method on the four area pool has been demonstrated. It should be pointed out that the compensation factors for 100, 80, 65 and 40% load were obtained using the (B)-matrices and tie power models calculated at such loads. It is interesting to note that the maximum deviation of the compensation factors derived at different load conditions was only 4.35%. This means that compensation factors derived at the base case load may be used for all load conditions and still preserve reasonable accuracy.

Finally, a procedural method of selecting and designing an acceptable optimum power system configuration from a group of system alternatives, in terms of a generalized symmetrical conductance (G)-matrix is presented. The diagonal elements of the (G)-matrix have a great significance since they represent the equivalent conductance of each area with respect to the centroid of the entire multiarea grid power system and the

self-conductance of the net interchange variables represent the mutual conductance between the areas, and hence can serve as a justified basis for comparing more than one optimum power system. Once an optimum (G)-matrix is identified, based on constraints set by the power pool members, through reverse transformation, the actual network in reference frame one can be obtained for design purposes. Table 7.3 gives the (G)-matrix for the system considered. Except for the first, all diagonal elements are positive. The element that is negative represents the self-conductance in reference frame 3.5 of area A which is a predominantly exporting base load area. Incidentally, the same element in the (R)-matrix given by Table 7.2 from which the (G)-matrix was obtained was positive. One possible explanation for the negative sign could be the dominance of the mutual coupling between the area A and the other areas and the net interchange variables. Another possible explanation could be that the area A is predominantly non-resistive, indicating a highly industrialized area. Be that as it may, the formation of the (G)-matrix can be a valuable tool in incorporating a number of design changes in the structure of the system. For instance, if the pool members decide to change the strength of the net interchange between any two specific areas, the appropriate element of the (G)-matrix can be modified. The strength of interconnection of area D is represented by the element 140.7 whereas that of area B by the element 24.45. Obviously, one can

conclude that area B is weakly interconnected to the remaining areas of the power pool. After appropriate modification of the elements of the (G)-matrix by a series of reverse transformations, it is possible to design a new network in reference frame one, reflecting the constraints set by members of the power pool. It is thus demonstrated that analysis of an arbitrary N area power system by the method presented herein can be very economical, since the dimension (2N-1) (2N-1) of the symmetrical conductance (G)-matrix is substantially smaller than the actual network.

APPENDIX I

ALGORITHM FOR FORMATION OF BUS IMPEDANCE MATRIX

The computer algorithm to obtain the bus impedance matrices is based on the work of Stagg and El-Abiad (1968). In essence, bus impedance matrices are directly obtained from system parameters and coded bus numbers by the logical addition of elements to partial networks whose bus impedance matrices are known. Figure I.1 shows a partial network of m buses with reference node 0. When an element p-q is added to the partial network it may be a branch or a link.

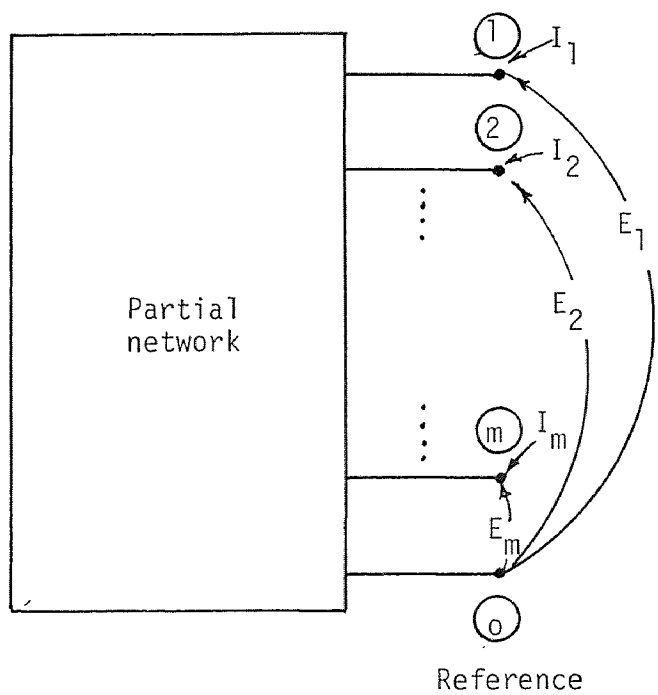

Fig. I.1 Representation of a Partial Network

I.1 Addition of a Branch

If p-q is a branch, a new bus q is added to the partial network as shown by Fig. I.2, and the resultant bus impedance matrix is of dimension (m+1)X(m+1). The determination of the new bus impedance matrix requires only the calculation of the elements in the new row and column and are obtained using the following equations:

1. If p is the reference bus

$$Z_{qi} = 0 \quad ; \; i = 1,2,\ldots m, \; i \neq q \tag{I.1a}$$

$$Z_{qq} = z_{pq,pq} \tag{I.1b}$$

2. If p is not the reference bus

$$Z_{qi} = Z_{pi} \quad ; \; i = 1,2,\ldots m, \; i \neq q \tag{I.2a}$$

$$Z_{qq} = Z_{pq} + z_{pq,pq} \tag{I.2b}$$

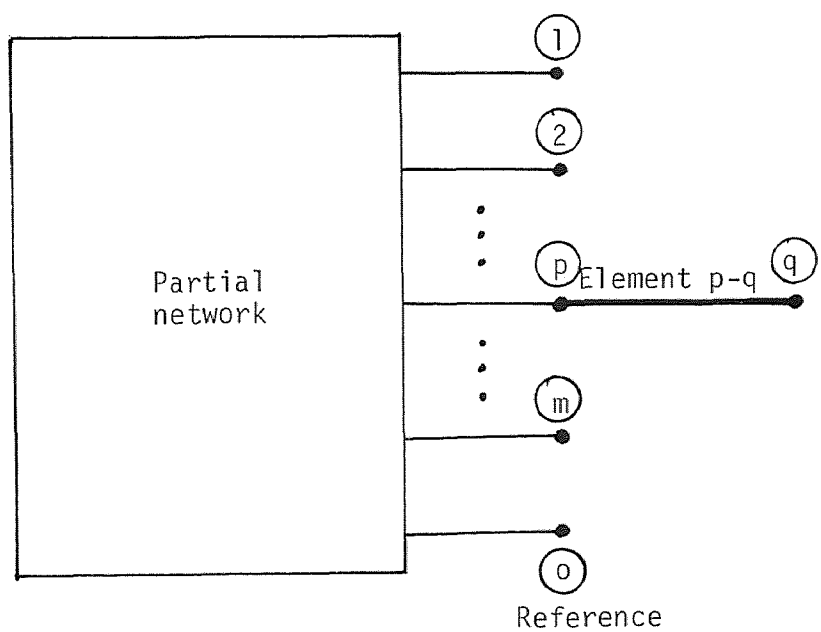

Fig. I.2 Representation of the Partial Network with the Addition of a Branch

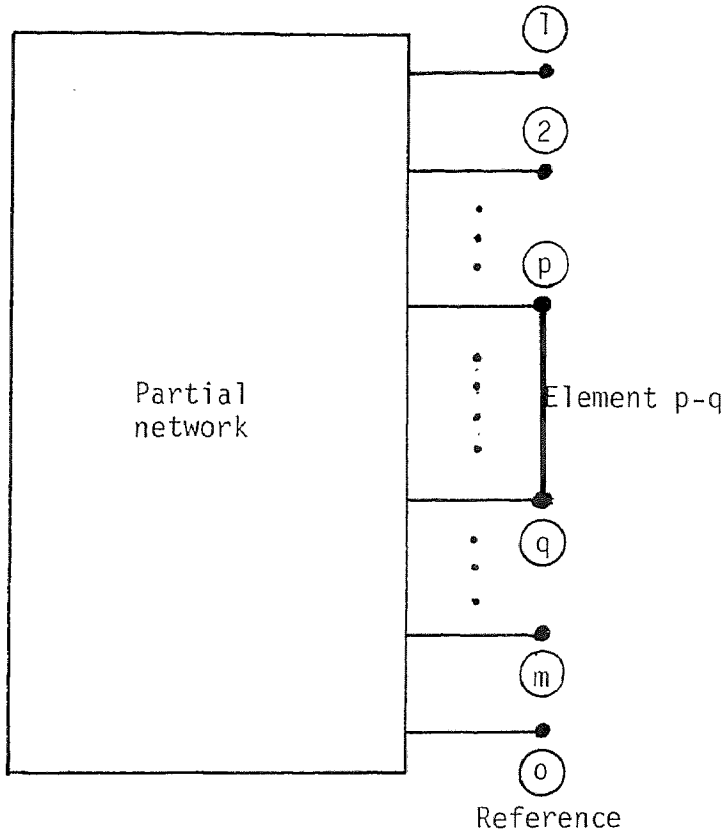

Fig. I.3 Representation of the Partial Network with the Addition of a Branch

I.2 Addition of a Link

If p-q is a link, no new bus is added to the partial network as shown by Fig. I.3. In this case, the dimension of the bus impedance matrix is unchanged, but all the elements must be recalculated to include the effect of the added link. This is done by adding a hypothetical row and column to the partial bus impedance matrix whose elements are obtained using the following equations:

1. If p is the reference bus

$$Z_{1i} = - Z_{qi} \qquad ; \; i = 1,2,\ldots m \quad i \neq 1 \tag{I.3a}$$

$$Z_{11} = - Z_{q1} + z_{pq,pq} \tag{I.3b}$$

2. If p is not the reference bus

$$Z_{1i} = Z_{pi} - Z_{qi} \qquad ; \; i = 1,2,\ldots m \tag{I.4a}$$

$$Z_{11} = Z_{p1} - Z_{q1} + z_{pq,pq} \tag{I.4b}$$

The elements of the new bus impedance matrix are then obtained using the following equation:

$$Z_{ij}(\text{new}) = Z_{ij}(\text{old}) - \frac{Z_{i1}Z_{1j}}{Z_{11}} \qquad ; \; i, j = 1,2,\ldots m \tag{I.5}$$

I.3 Basic Data

Table I.1 provides a summary of the buses and elements of the multiarea grid power system used in this research. Tables I.2, I.3, I.4 and I.5 provide the coded bus element data for areas A,B,C and D, respectively, that were used to determine the respective bus impedance matrices. It should be noted that the impedances of the elements $z_{pq,pq}$ are in percent per 100 MVA base.

Table I.1 Summary of Buses and Elements of the Multiarea Grid Power System

	Area A	Area B	Area C	Area D
Number of Buses	31	39	23	101
Number of Elements	96	42	30	136
Number of Branches	30	38	22	100
Number of Links	66	4	9	36
Reference Bus Number	101	201	301	401
Branch Code	0	0	0	0
Link Code	1	1	1	1

Table I.2 Area A Coded Bus Element Data

Element Number	Element Code	Bus p	Bus q	Impedance $z_{pq,pq}$	
1	0	101	102	0.430	24.620
2	0	102	103	0.420	11.140
3	0	102	104	-4.280	472.270
4	1	102	104	1.240	68.020
5	0	102	105	9.640	94.770
6	0	102	106	0.060	3.210
7	1	102	106	0.180	5.770
8	0	102	107	0.540	10.560
9	0	102	108	0.920	11.420
10	0	102	109	0.480	8.540
11	0	102	110	0.100	2.630
12	0	102	111	0.020	0.480
13	0	102	112	7.880	178.010
14	0	102	113	110.260	397.450
15	0	104	114	0.110	4.260
16	1	104	114	10.190	87.870
17	0	110	115	0.020	0.110
18	0	115	116	0.020	1.480
19	1	115	116	0.020	1.480
20	0	116	117	0.000	1.480
21	0	116	118	0.040	0.180
22	0	114	119	0.350	2.005
23	0	104	120	0.210	2.375

Continued Table I.2

Element Number	Element Code	Bus p	Bus q	Impedance $z_{pq,pq}$	
24	0	104	121	0.050	0.560
25	1	104	105	1.000	9.350
26	1	104	105	15.150	146.390
27	0	105	122	0.065	0.795
28	0	106	123	0.135	1.525
29	0	102	124	0.020	0.920
30	1	102	124	0.020	0.920
31	0	103	125	0.010	0.920
32	1	103	125	0.010	0.920
33	1	103	125	0.010	0.920
34	0	111	126	0.010	0.920
35	1	111	126	0.010	0.920
36	0	108	127	0.145	1.100
37	0	112	128	0.015	0.120
38	0	109	129	0.015	0.165
39	0	113	130	0.025	0.300
40	0	107	131	0.110	0.680
41	1	103	104	4.530	165.890
42	1	103	105	20.190	184.920
43	1	103	106	0.570	12.140
44	1	103	107	0.590	7.150
45	1	103	108	4.090	43.320
46	1	103	109	1.480	23.880

Continued Table I.2

Element Number	Element Code	Bus p	Bus q	Impedance $z_{pq,pq}$	
47	1	103	110	9.360	96.440
48	1	101	103	0.840	35.030
49	1	105	114	94.590	409.450
50	1	106	114	8.920	47.860
51	1	104	106	0.340	6.000
52	1	104	106	3.550	58.660
53	1	104	107	8.200	104.510
54	1	104	108	11.000	91.950
55	1	104	109	6.640	70.260
56	1	104	110	16.450	151.380
57	1	101	104	4.940	224.830
58	1	105	106	4.220	27.850
59	1	105	106	10.560	76.390
60	1	105	107	28.810	191.630
61	1	105	108	49.180	242.160
62	1	105	109	31.130	177.620
63	1	105	110	12.600	65.470
64	1	101	105	17.490	160.150
65	1	106	107	0.940	13.990
66	1	106	108	1.860	20.440
67	1	106	112	17.340	318.820
68	1	106	109	0.990	14.640
69	1	106	110	5.530	46.930

Continued Table I.2

Element Number	Element Code	Bus p	Bus q	Impedance $z_{pq,pq}$	
70	1	101	106	1.040	22.730
71	1	107	108	22.200	197.550
72	1	107	108	2.210	14.460
73	1	107	112	8.330	93.470
74	1	107	112	26.230	226.140
75	1	107	109	0.640	5.500
76	1	107	109	1.240	10.010
77	1	107	113	73.490	218.120
78	1	107	113	176.630	496.490
79	1	107	110	16.650	141.970
80	1	101	107	2.280	52.120
81	1	108	112	0.480	13.280
82	1	108	112	24.440	163.040
83	1	108	109	4.410	45.710
84	1	108	109	1.320	8.120
85	1	108	113	3.590	16.900
86	1	108	113	139.820	355.100
87	1	108	110	54.350	342.300
88	1	101	108	11.750	142.590
89	1	109	112	1.620	19.900
90	1	109	112	15.920	126.920
91	1	112	113	0.430	3.750
92	1	109	113	15.230	46.370

Continued Table I.2

Element Number	Element Code	Bus p	Bus q	Impedance $z_{pq,pq}$	
93	1	109	113	101.840	278.040
94	1	109	110	29.260	223.030
95	1	101	109	5.000	89.720
96	1	101	110	2.670	42.690

Table I.3 Area B Coded Bus Element Data

Element Number	Element Code	Bus p	Bus q	Impedance $z_{pq,pq}$	
1	0	201	202	3.000	12.310
2	0	201	203	1.600	18.060
3	0	203	204	0.530	6.000
4	1	202	204	3.540	14.270
5	0	204	205	0.790	13.630
6	0	205	206	0.440	5.050
7	0	205	207	0.100	1.120
8	0	205	208	0.100	1.120
9	0	205	209	0.120	1.360
10	0	205	210	0.120	1.360
11	0	206	211	0.200	2.300
12	0	207	212	0.100	1.140
13	0	212	213	0.240	2.780
14	0	213	214	0.270	3.100
15	0	214	215	0.830	6.250
16	0	210	216	0.190	2.190
17	0	216	217	0.100	1.150
18	0	217	218	0.000	4.840
19	0	217	219	0.060	0.630
20	0	218	220	1.590	22.760
21	0	220	221	0.000	9.000
22	0	217	222	0.270	3.110
23	0	221	223	0.270	3.100

Continued Table I.3

Element Number	Element Code	Bus p	Bus q	Impedance $z_{pq,pq}$	
24	0	221	224	0.100	1.060
25	0	221	225	0.300	3.430
26	0	217	226	0.160	1.800
27	0	222	227	0.090	1.020
28	0	224	228	0.070	0.800
29	1	222	226	0.170	1.880
30	1	221	222	0.070	0.840
31	1	222	227	0.090	1.020
32	0	202	229	0.350	2.005
33	0	211	230	0.135	1.525
34	0	208	231	0.210	2.375
35	0	214	232	0.050	0.560
36	0	214	233	0.065	0.795
37	0	223	234	0.115	1.300
38	0	215	235	0.090	0.510
39	0	217	236	0.050	0.575
40	0	209	237	0.095	1.055
41	0	205	238	0.015	0.100
42	0	225	239	0.070	0.795

Table I.4 Area C Coded Bus Element Data

Element Number	Element Code	Bus p	Bus q	Impedance $z_{pq,pq}$	
1	0	301	302	0.720	3.900
2	1	301	302	0.720	3.900
3	0	301	303	1.040	5.950
4	0	301	304	0.650	3.520
5	0	302	305	3.510	10.770
6	0	303	306	4.000	12.250
7	0	303	307	4.020	12.450
8	0	303	308	0.000	3.250
9	0	305	309	0.540	1.670
10	0	309	310	5.300	2.840
11	0	307	311	0.410	4.520
12	0	306	312	1.470	4.350
13	0	307	313	1.480	4.370
14	0	308	314	10.340	24.140
15	0	313	315	2.200	6.660
16	0	311	316	0.000	5.140
17	1	311	316	0.000	5.200
18	0	316	317	0.480	2.780
19	0	317	318	20.580	47.140
20	1	315	317	8.890	29.150
21	1	310	315	4.210	14.220
22	1	312	315	2.200	6.660
23	1	306	311	0.410	4.520

Continued Table I.4

Element Number	Element Code	Bus p	Bus q	Impedance $z_{pq,pq}$	
24	1	303	304	0.440	2.410
25	1	316	318	8.620	28.480
26	0	317	319	0.110	0.680
27	0	317	320	0.065	0.570
28	0	316	321	0.045	0.490
29	0	318	322	0.055	0.610
30	0	318	323	0.035	0.395

Table I.5 Area D Coded Bus Element Data

Element Number	Element Code	Bus p	Bus q	Impedance $z_{pq,pq}$	
1	0	401	402	0.140	1.510
2	0	401	403	0.110	3.270
3	1	401	403	0.110	3.270
4	0	402	404	0.100	1.600
5	0	403	405	0.720	7.960
6	0	403	406	1.500	8.800
7	0	403	407	1.620	8.850
8	0	403	408	0.890	9.820
9	0	403	409	0.000	1.830
10	0	404	410	0.370	2.890
11	0	405	411	0.060	2.650
12	0	405	412	0.290	1.850
13	0	406	413	0.000	5.000
14	0	406	414	0.250	2.770
15	0	408	415	0.240	1.530
16	0	409	416	0.120	1.350
17	0	410	417	0.160	1.740
18	0	410	418	0.340	4.350
19	0	411	419	0.180	2.250
20	0	411	420	0.030	0.290
21	0	412	421	0.230	1.500
22	0	414	422	0.060	2.650
23	1	414	422	0.060	2.650

Continued Table I.5

Element Number	Element Code	Bus p	Bus q	Impedance $z_{pq,pq}$	
24	0	414	423	0.070	0.320
25	0	415	424	0.420	2.850
26	0	417	425	0.080	0.890
27	0	418	426	0.090	1.070
28	0	418	427	0.090	1.070
29	0	418	428	0.430	12.500
30	0	418	429	0.430	12.400
31	0	419	430	0.070	0.840
32	0	422	431	0.230	2.970
33	0	423	432	0.380	10.540
34	0	424	433	0.550	4.070
35	0	425	434	0.010	0.090
36	0	426	435	0.040	0.540
37	0	427	436	0.040	0.160
38	0	428	437	1.470	8.800
39	0	428	438	0.320	1.910
40	0	429	439	1.470	8.800
41	0	430	440	0.000	0.920
42	0	430	441	0.010	0.110
43	0	431	442	0.170	1.860
44	0	431	443	0.060	0.610
45	0	431	444	0.050	0.540
46	0	431	445	0.040	0.540

Continued Table I.5

Element Number	Element Code	Bus p	Bus q	Impedance $z_{pq,pq}$	
47	0	432	446	0.020	0.320
48	0	432	447	0.040	0.460
49	0	433	448	0.110	3.090
50	0	433	449	0.050	0.240
51	0	435	450	0.060	2.650
52	0	435	451	0.060	2.650
53	1	435	451	0.060	2.650
54	0	435	452	0.070	0.840
55	0	435	453	0.140	1.840
56	0	435	454	0.050	0.210
57	0	437	455	0.000	8.230
58	0	437	456	0.050	0.340
59	0	438	457	0.220	1.020
60	0	439	458	0.050	0.390
61	0	442	459	0.000	0.920
62	0	445	460	0.140	2.020
63	0	446	461	0.140	1.710
64	0	448	462	0.000	12.400
65	0	449	463	0.280	1.290
66	0	449	464	0.130	3.200
67	0	450	465	0.100	0.430
68	0	451	466	0.190	0.890
69	1	451	466	0.320	1.210

Continued Table I.5

Element Number	Element Code	Bus p	Bus q	Impedance $z_{pq,pq}$	
70	0	452	467	0.070	1.770
71	0	454	468	0.070	0.350
72	0	456	469	0.120	0.520
73	0	456	470	0.530	2.880
74	0	456	471	1.120	16.300
75	0	457	472	0.090	0.410
76	0	461	473	0.000	1.270
77	0	463	474	0.060	2.650
78	0	463	475	0.070	0.790
79	0	467	476	0.040	1.480
80	0	467	477	0.110	1.100
81	0	468	478	0.050	0.290
82	0	469	479	0.280	1.600
83	0	474	480	0.060	2.650
84	0	474	481	0.020	0.260
85	0	475	482	0.130	4.040
86	0	476	483	0.030	0.170
87	0	478	484	0.050	0.260
88	1	472	475	0.220	2.230
89	1	427	435	0.040	0.540
90	1	479	480	0.050	0.590
91	1	465	470	0.200	3.540
92	1	466	470	0.410	4.220

Continued Table I.5

Element Number	Element Code	Bus p	Bus q	Impedance $z_{pq,pq}$	
93	1	458	470	0.540	2.870
94	1	410	411	0.230	2.460
95	1	407	413	0.000	5.000
96	1	407	414	0.490	4.730
97	1	448	453	0.060	2.650
98	1	453	464	0.060	2.650
99	1	453	467	0.070	0.870
100	1	462	464	0.000	26.400
101	1	458	467	0.060	2.650
102	1	456	467	0.060	2.650
103	1	439	455	0.000	8.230
104	1	468	477	0.070	0.300
105	1	479	482	0.130	4.040
106	1	475	479	0.000	39.600
107	1	420	430	0.360	3.650
108	1	458	471	1.120	16.300
109	1	456	458	0.660	36.100
110	1	415	421	1.120	37.600
111	1	421	424	0.300	2.750
112	1	460	461	0.000	1.270
113	1	429	438	0.320	1.900
114	1	419	424	0.060	2.650
115	1	419	420	0.330	3.570

Continued Table I.5

Element Number	Element Code	Bus p	Bus q	Impedance $z_{pq,pq}$	
116	0	410	485	0.020	0.920
117	1	410	485	0.020	0.920
118	0	459	486	0.015	0.120
119	0	422	487	0.015	0.165
120	0	416	488	0.025	0.300
121	0	461	489	0.010	0.920
122	1	461	489	0.010	0.920
123	1	461	489	0.010	0.920
124	0	404	490	0.145	1.100
125	0	420	491	0.010	0.920
126	1	420	491	0.010	0.920
127	0	425	492	0.095	1.055
128	0	402	493	0.070	0.795
129	0	434	494	0.050	0.575
130	0	443	495	0.115	1.300
131	0	418	496	0.090	0.510
132	0	418	497	0.015	0.100
133	0	447	498	0.065	0.570
134	0	444	499	0.055	0.610
135	0	461	500	0.045	0.490
136	0	473	501	0.035	0.395

APPENDIX II

VALIDITY OF MATRIX TRANSFORMATIONS

It is required to prove that if

$$i_{old} = C\ i_{new} \tag{II.1}$$

and if the power is to remain invariant, the new set of voltages is given by

$$V_{new} = C_t^* V_{old} \tag{II.2}$$

and the new set of impedances is given by

$$Z_{new} = C_t^* Z_{old}\ C \tag{II.3}$$

The bus impedance and power equations for the old and new set of variables can be written as

$$V_{old} = Z_{old}\ i_{old} \tag{II.4}$$

$$P_{old} = V_{old}\ i_{old}^* \tag{II.5}$$

$$V_{new} = Z_{new}\ i_{new} \tag{II.6}$$

$$P_{new} = V_{new}\ i_{new}^* \tag{II.7}$$

However, it is required that

$$P_{old} = P_{new}$$

Hence,

$$V_{old}\ i_{old}^* = V_{new}\ i_{new}^*$$

And since $i_{old} = C\ i_{new}$

we have

$$V_{new}\ i_{new}^* = V_{old}\ C^*\ i_{new}^* \qquad \text{(II.8)}$$

or $$V_{new} = V_{old}\ C^*$$

$$V_{new} = C_t^*\ V_{old}$$

Substituting Eq. (II.1) in Eq. (II.6) we have

$$V_{old} = Z_{old}\ C\ i_{new} \qquad \text{(II.9)}$$

Multiplying both sides by C_t^*, we have

$$C_t^*\ V_{old} = C_t^*\ Z_{old}\ C\ i_{new} \qquad \text{(II.10)}$$

From Eq. (II.8) and Eq. (II.2)

$$V_{new} = C_t^*\ V_{old} = C_t^*\ Z_{old}\ C\ i_{new} \qquad \text{(II.11)}$$

By inspection of Eqs. (II.11) and (II.6) we have

$$Z_{new} = C_t^*\ Z_{old}\ C \qquad \text{(II.12)}$$

APPENDIX III

COEFFICIENTS OF TRANSMISSION LOSS MODELS

The coefficients of the transmission loss matrices obtained from the base case 65% load flow data for areas A,B,C and D are shown in Tables III.2, III.3, III.4 and III.5, respectively. Table III.1 provides the identification of the various buses in terms of whether they are generator buses or tie buses for all areas.

Table III.1 Identification of Generator and Tie Buses

Area	Buses	Identification
A	101, 104, 114	Generator
A	119 to 131	Tie
B	201, 206, 211	Generator
B	214, 217, 218	Generator
B	219, 228	Generator
B	229 to 239	Tie
C	301, 302, 305	Generator
C	308, 310, 314	Generator
C	315, 317	Generator
C	319 to 323	Tie
D	401, 406, 407	Generator
D	413, 419, 424	Generator
D	430, 442, 448	Generator
D	453, 455, 462	Generator
D	467, 469, 470	Generator
D	481, 482, 484	Generator
D	485 to 501	Tie

Table III.2 Area A Transmission Loss Coefficients

Between Buses	Coefficient	Between Buses	Coefficient
101 101	0.60128606E-03	101 104	0.94019400E-04
101 114	0.83771315E-04	101 119	0.87968059E-04
101 120	0.97120311E-04	101 121	0.94469578E-04
101 122	0.10877405E-03	101 123	0.97848067E-04
101 124	0.97164534E-04	101 125	0.13875213E-03
101 126	0.97787269E-04	101 127	-0.41242936E-04
101 128	-0.14390949E-03	101 129	0.16070698E-04
101 130	-0.18066306E-03	101 131	0.52764706E-04
104 104	0.14089718E-02	104 114	0.14299408E-02
104 119	0.14366675E-02	104 120	0.14158746E-02
104 121	0.14103530E-02	104 122	0.10488960E-02
104 123	0.46596419E-03	104 124	0.35810796E-03
104 125	0.29716081E-03	104 126	0.35818922E-03
104 127	0.75509960E-04	104 128	-0.21696795E-03
104 129	0.14307137E-03	104 130	-0.32817921E-03
104 131	0.22651297E-03	114 114	0.20977408E-02
114 119	0.21076843E-02	114 120	0.14370515E-02
114 121	0.14313699E-02	114 122	0.10255757E-02
114 123	0.43183867E-03	114 124	0.33490825E-03
114 125	0.27660443E-03	114 126	0.33498019E-03
114 127	0.61001803E-04	114 128	0.22617892E-03
114 129	0.12718214E-03	114 130	0.33521838E-03
114 131	0.20874114E-03	119 119	0.35751122E-02

Continued Table III.2

Between Buses	Coefficient	Between Buses	Coefficient
119 120	0.14448203E-02	119 121	0.14383686E-02
119 122	0.10306293E-02	119 123	0.43384032E-03
119 124	0.33653457E-03	119 125	0.27737999E-03
119 126	0.33662840E-03	119 127	0.60935592E-04
119 128	0.22876488E-03	119 129	0.12735867E-03
119 130	-0.33887336E-03	119 131	0.20973664E-03
120 120	0.23390977E-02	120 121	0.14185009E-02
120 122	0.10553738E-02	120 123	0.46804663E-03
120 124	0.36101555E-03	120 125	0.29660249E-03
120 126	0.36145490E-03	120 127	0.77122851E-04
120 128	-0.21984892E-03	120 129	0.14543395E-03
120 130	-0.33360975E-03	120 131	0.22929822E-03
121 121	0.16267484E-02	121 122	0.10502802E-02
121 123	0.46636839E-03	121 124	0.35878131E-03
121 125	0.29693683E-03	121 126	0.35896175E-03
121 127	0.75974487E-04	121 128	-0.21753661E-03
121 129	0.14372774E-03	121 130	-0.32936758E-03
121 131	0.22720976E-03	122 122	0.35867610E-02
122 123	0.44877966E-03	122 124	0.35466486E-03
122 125	0.30447263E-03	122 126	0.35488023E-03
122 127	0.73079077E-04	122 128	-0.22020876E-03
122 129	0.14265087E-03	122 130	-0.33229938E-03
122 131	0.23023276E-03	123 123	0.11501610E-02

Continued Table III.2

Between Buses	Coefficient	Between Buses	Coefficient
123 124	0.40757958E-03	123 125	0.32335147E-03
123 126	0.40763826E-03	123 127	0.96127914E-04
123 128	-0.19344196E-03	123 129	0.16449971E-03
123 130	-0.30484213E-03	123 131	0.25031017E-03
124 124	0.52038091E-03	124 125	0.30195154E-03
124 126	0.47779432E-03	124 127	0.94720715E-04
124 128	-0.19876186E-03	124 129	0.16098954E-03
124 130	-0.31223543E-03	124 131	0.24129085E-03
125 125	0.83661894E-03	125 126	0.30142581E-03
125 127	0.59463578E-04	125 128	-0.22062330E-03
125 129	0.15415385E-03	125 130	-0.33012917E-03
125 131	0.30559138E-03	126 126	0.58659026E-03
126 127	0.95104041E-04	126 128	-0.19934177E-03
126 129	0.16153145E-03	126 130	-0.31343894E-03
126 131	0.24183288E-03	127 127	0.16406993E-02
127 128	0.28736004E-03	127 129	0.59577025E-04
127 130	0.20538321E-03	127 131	0.62811028E-04
128 128	0.19194616E-02	128 129	-0.12831285E-03
128 130	0.17141928E-02	128 131	-0.18322541E-03
129 129	0.68737985E-03	129 130	-0.25704596E-03
129 131	0.21990409E-03	130 130	0.34098739E-02
130 131	-0.29982347E-03	131 131	0.11837659E-02

Table III.3 Area B Transmission Loss Coefficients

Between Buses	Coefficient	Between Buses	Coefficient
201 201	0.25758393E-01	201 206	0.82255573E-04
201 211	0.15079886E-03	201 214	-0.25807274E-03
201 217	-0.19498321E-02	201 218	-0.18767547E-02
201 219	-0.19498684E-02	201 228	-0.25191754E-02
201 229	0.16689792E-01	201 230	0.19586048E-03
201 231	0.26853661E-03	201 232	-0.23657414E-03
201 233	-0.24718884E-03	201 234	-0.26184241E-02
201 235	0.70994044E-03	201 236	-0.19467650E-02
201 237	0.19251271E-03	201 238	0.18163194E-03
201 239	-0.26235636E-02	206 206	0.54577402E-02
206 211	0.54331384E-02	206 214	0.80741778E-03
206 217	-0.76797627E-03	206 218	-0.78182131E-03
206 219	-0.76800212E-03	206 228	-0.14778501E-02
206 229	0.19570652E-04	206 230	0.54049231E-02
206 231	0.13809572E-02	206 232	0.80765015E-03
206 233	0.80625154E-03	206 234	-0.14554707E-02
206 235	0.40620006E-03	206 236	-0.76761282E-03
206 237	0.13588727E-02	206 238	0.14072587E-02
206 239	-0.14628235E-02	211 211	0.73413290E-02
211 214	0.80027640E-03	211 217	-0.76648476E-03
211 218	-0.78260013E-03	211 219	-0.76652015E-03
211 228	-0.14824390E-02	211 229	0.58346937E-04
211 230	0.73159635E-02	211 231	0.13743190E-02

Continued Table III.3

Between Buses	Coefficient	Between Buses	Coefficient
211 232	0.80116419E-03	211 233	0.79926941E-03
211 234	-0.14525936E-02	211 235	0.39685121E-03
211 236	-0.76599488E-03	211 237	0.13495304E-02
211 238	0.13947948E-02	211 239	-0.14577690E-02
214 214	0.71245990E-02	214 217	-0.11443342E-02
214 218	-0.11538463E-02	214 219	-0.11443668E-02
214 228	-0.18594447E-02	214 229	-0.33707427E-03
214 230	0.79462281E-03	214 231	0.97608962E-03
214 232	0.71181282E-02	214 233	0.71137845E-02
214 234	-0.18218760E-02	214 235	0.67921765E-02
214 236	-0.11443612E-02	214 237	0.95351785E-03
214 238	0.10046279E-02	214 239	-0.18337774E-02
217 217	0.12038096E-02	217 218	0.11327695E-02
217 219	0.12037971E-02	217 228	0.47359056E-03
217 229	-0.19512961E-02	217 230	-0.76314108E-03
217 231	-0.58953487E-03	217 232	-0.11412192E-02
217 233	-0.11418692E-02	217 234	0.50318683E-03
217 235	-0.15622876E-02	217 236	0.12047370E-02
217 237	-0.61832088E-03	217 238	-0.56136189E-03
217 239	0.51670521E-03	218 218	0.13172345E-02
218 219	0.11327486E-02	218 228	0.53889816E-03
218 229	-0.19034594E-02	218 230	-0.78054703E-03
218 231	-0.60834595E-03	218 232	-0.11514754E-02

Continued Table III.3

Between Buses	Coefficient	Between Buses	Coefficient
218 233	-0.11519322E.02	218 234	0.56478590E-03
218 235	-0.15622184E-02	218 236	0.11340023E-02
218 237	-0.63582882E-03	218 238	-0.57869660E-03
218 239	0.58199977E-03	219 219	0.17793535E-02
219 228	0.47355890E-03	219 229	-0.19513306E-02
219 230	-0.76318276E-03	219 231	-0.58956257E-03
219 232	-0.11412546E-02	219 233	-0.11419030E-02
219 234	0.50317472E-03	219 235	-0.15623143E-02
219 236	0.12047240E-02	219 237	-0.61834184E-03
219 238	-0.56137423E-03	219 239	0.51669101E-03
228 228	0.32163335E-02	228 229	-0.25693518E-02
228 230	-0.14809777E-02	228 231	-0.12989964E-02
228 232	-0.18579364E-02	228 233	-0.18575385E-02
228 234	0.16344243E-02	228 235	-0.22819310E-02
228 236	0.47462503E-03	228 237	-0.13264883E-02
228 238	-0.12605223E-02	228 239	0.16699315E-02
229 229	0.29826816E-01	229 230	0.84286424E-04
229 231	0.19815062E-03	229 232	-0.32392609E-03
229 233	-0.33049960E-03	229 234	-0.26111582E-02
229 235	-0.76685845E-03	229 236	-0.19497483E-02
229 237	0.14301638E-03	229 238	0.15845009E-03
229 239	-0.26236342E-02	230 230	0.85867978E-02
230 231	0.13675252E-02	230 232	0.79598277E-03

Continued Table III.3

Between Buses	Coefficient	Between Buses	Coefficient
230 233	0.79374620E-03	230 234	-0.14467146E-02
230 235	0.39063720E-03	230 236	-0.76256156E-03
230 237	0.13409217E-02	230 238	0.13838941E-02
230 239	-0.14504173E-02	231 231	0.45086406E-02
231 232	0.97615504E-03	231 233	0.97463885E-03
231 234	-0.12754647E-02	231 235	0.57824212E-03
231 236	-0.58903568E-03	231 237	0.15265287E-02
231 238	-0.15735207E-02	231 239	-0.12800158E-02
232 232	0.75856298E-02	232 233	0.71081481E-02
232 234	-0.18181780E-02	232 235	0.67820250E-02
232 236	-0.11412129E-02	232 237	0.95287850E-03
232 238	0.10031387E-02	232 239	-0.18294444E-02
233 233	0.77167227E-02	233 234	-0.18184544E-02
233 235	0.67798420E-02	233 236	-0.11418874E-02
233 237	0.95184869E-03	233 238	0.10026367E-02
233 239	-0.18300575E-02	234 234	0.52995719E-02
234 235	-0.22426317E-02	234 236	0.50354353E-03
234 237	-0.13059061E-02	234 238	-0.12455115E-02
234 239	0.17048598E-02	235 235	0.15356760E-01
235 236	-0.15627837E-02	235 237	0.55691367E-03
235 238	0.61398046E-03	235 239	-0.22619769E-02
236 236	0.16858110E-02	236 237	-0.61797769E-03
236 238	-0.56113232E-03	236 239	0.51730917E-03

Continued Table III.3

Between Buses	Coefficient	Between Buses	Coefficient
237 237	0.35798338E-02	237 238	0.15575185E-02
237 239	-0.13125713E-02	238 238	0.17547335E-02
238 239	-0.12534973E-02	239 239	0.53046196E-02

Table III.4 Area C Transmission Loss Coefficients

Between Buses	Coefficient	Between Buses	Coefficient
301 301	0.99305436E-02	301 302	0.92739798E-02
301 305	0.39240866E-02	301 308	0.65859854E-02
301 310	-0.29791798E-02	301 314	0.80744316E-03
301 315	-0.39363801E-02	301 317	-0.37012044E-02
301 319	-0.37016959E-02	301 320	-0.37005672E-02
301 321	-0.32256399E-02	301 322	-0.10058254E-01
301 323	-0.10054491E-01	302 302	0.12013990E-01
302 305	0.61430260E-02	302 308	0.58736018E-02
302 310	-0.26990282E-02	302 314	0.25661473E-04
302 315	-0.41829794E-02	302 317	-0.41788481E-02
302 319	-0.41827186E-02	302 320	-0.41772089E-02
302 321	-0.36924579E-02	302 322	-0.10641076E-01
302 323	-0.10622293E-01	305 305	0.27971532E-01
305 308	0.10117921E-02	305 310	0.64001418E-02
305 314	-0.52113458E-02	305 315	-0.27030949E-02
305 317	-0.53361207E-02	305 319	-0.53516738E-02
305 320	-0.53325332E-02	305 321	-0.49234144E-02
305 322	-0.12208160E-01	305 323	-0.12138970E-01
308 308	0.84635391E-02	308 310	-0.32405849E-02
308 314	0.25371201E-02	308 315	-0.33903185E-02
308 317	-0.27825153E-02	308 319	-0.27900862E-02
308 320	-0.27817602E-02	308 321	-0.22637239E-02
308 322	-0.96677429E-02	308 323	-0.96175111E-02

Continued Table III.4

Between Buses	Coefficient	Between Buses	Coefficient
310 310	0.31726629E-01	310 314	-0.97139179E-02
310 315	0.59248320E-02	310 317	-0.15658387E-02
310 319	-0.15748509E-02	310 320	-0.15685370E-02
310 321	-0.15363281E-02	310 322	-0.87613202E-02
310 323	-0.87059959E-02	314 314	0.11117935E-00
314 315	-0.96700675E-02	314 317	-0.88015496E-02
314 319	-0.88340155E-02	314 320	-0.87896138E-02
314 321	-0.81625804E-02	314 322	-0.16249791E-01
314 323	-0.16100578E-01	315 315	0.13058953E-01
315 317	0.24576311E-02	315 319	0.24607114E-02
315 320	0.24479490E-02	315 321	0.22923280E-02
315 322	-0.46232156E-02	315 323	-0.46102777E-02
317 317	0.10350771E-01	317 319	0.10385327E-01
317 320	0.10336008E-01	317 321	0.64409561E-02
317 322	0.55188639E-03	317 323	0.52397069E-03
319 319	0.11415083E-01	319 320	0.10370802E-01
319 321	0.64614117E-02	319 322	0.54570985E-03
319 323	0.51951711E-03	320 320	0.10903720E-01
320 321	0.64301267E-02	320 322	0.55031385E-03
320 323	0.52193133E-03	321 321	0.71190036E-02
321 322	0.57940356E-04	321 323	0.32029362E-04
322 322	0.50432369E-01	322 323	0.49392514E-01
323 323	0.49209535E-01		

Table III.5 Area D Transmission Loss Coefficients

Between Buses	Coefficient	Between Buses	Coefficient
401 401	0.30806174E-02	401 406	0.12553865E-02
401 407	0.13071029E-02	401 413	0.12110760E-02
401 419	0.76470361E-03	401 424	0.70062559E-03
401 430	0.74691046E-03	401 442	0.85552153E-03
401 448	-0.51857088E-03	401 453	-0.57664955E-03
401 455	-0.67620514E-03	401 462	-0.52986806E-03
401 467	-0.63936295E-03	401 469	-0.70785963E-03
401 470	-0.71735144E-03	401 481	-0.71991095E-03
401 482	-0.68754982E-03	401 484	-0.61487234E-03
401 485	0.82546798E-03	401 486	0.79913600E-03
401 487	0.10159325E-02	401 488	0.27081475E-02
401 489	0.11093202E-02	401 490	0.22126914E-02
401 491	0.79739885E-03	401 492	0.78225415E-03
401 493	0.25533908E-02	401 494	0.77897333E-03
401 495	0.94264862E-03	401 496	-0.38655102E-03
401 497	-0.38745417E-03	401 498	0.96619874E-03
401 499	-0.10155162E-02	401 500	0.10372137E-02
401 501	0.15719098E-02	406 406	0.81377103E-02
406 407	0.69844983E-02	406 413	0.74250251E-02
406 419	-0.66854269E-03	406 424	-0.67122164E-03
406 430	0.66278642E-03	406 442	0.74540749E-02
406 448	-0.19356299E-02	406 453	-0.20109969E-02
406 455	-0.21348244E-02	406 462	-0.19454407E-02

Continued Table III.5

Between Buses	Coefficient	Between Buses	Coefficient
406 467	-0.20912795E-02	406 469	-0.21269647E-02
406 470	-0.21764305E-02	406 481	-0.21687718E-02
406 482	-0.21035245E-02	406 484	-0.20711974E-02
406 485	-0.75265392E-03	406 486	0.74686408E-02
406 487	0.75796768E-02	406 488	0.16382732E-02
406 489	0.70889629E-02	406 490	0.50536612E-03
406 491	-0.13083231E-02	406 492	-0.75361691E-03
406 493	0.81412936E-03	406 494	-0.70697977E-03
406 495	0.73808580E-02	406 496	-0.19399191E-02
406 497	-0.18580989E-02	406 498	0.71441978E-02
406 499	0.74311755E-02	406 500	0.70320479E-02
406 501	0.70198997E-02	407 407	0.84250532E-02
407 413	0.75644589E-02	407 419	-0.61526009E-03
407 424	-0.62136561E-03	407 430	-0.61038299E-03
407 442	0.71541219E-02	407 448	-0.18846006E-02
407 453	-0.19590619E-02	407 455	-0.20820117E-02
407 462	0.18944803E-02	407 467	-0.20386188E-02
407 469	0.20756600E-02	407 470	-0.21237857E-02
407 481	-0.21164303E-02	407 482	-0.20520552E-02
407 484	-0.20184347E-02	407 485	-0.69710193E-03
407 486	0.71654058E-02	407 487	0.72808228E-02
407 488	0.16828338E-02	407 489	0.68177133E-02
407 490	0.55628363E-03	407 491	-0.12295388E-02

Continued Table III.5

Between Buses	Coefficient	Between Buses	Coefficient
407 492	-0.69965445E-03	407 493	0.86536956E-03
407 494	-0.65491604E-03	407 495	0.70883147E-02
407 496	-0.18837187E-02	407 497	-0.18051909E-02
407 498	0.68636313E-02	407 499	0.70455595E-02
407 500	0.67600235E-02	407 501	0.67732855E-02
413 413	0.73698349E-02	413 419	-0.67282351E-03
413 424	-0.67835208E-03	413 430	-0.66796550E-03
413 442	0.71911402E-02	413 448	-0.19169024E-02
413 453	-0.19879651E-02	413 455	-0.21051404E-02
413 462	-0.19266317E-02	413 467	-0.20644313E-02
413 469	-0.21017459E-02	413 470	-0.21506427E-02
413 481	-0.21403215E-02	413 482	-0.20691752E-02
413 484	-0.20456777E-02	413 485	-0.75042735E-03
413 486	0.72137452E-02	413 487	0.73047615E-02
413 488	0.15937418E-02	413 489	0.67933276E-02
413 490	0.47720829E-03	413 491	-0.12755063E-02
413 492	-0.75321272E-03	413 493	0.77973189E-03
413 494	-0.70934463E-03	413 495	0.71062035E-02
413 496	-0.19101209E-02	413 497	-0.18369155E-02
413 498	0.68635195E-02	413 499	0.74334032E-02
413 500	0.67474879E-02	413 501	0.66621415E-02
419 419	0.22172404E-02	419 424	0.18743214E-02
419 430	0.21147765E-02	419 442	-0.10834008E-02

Continued Table III.5

Between Buses	Coefficient	Between Buses	Coefficient
419 448	0.13211895E-03	419 453	0.19180486E-04
419 455	-0.11683292E-03	419 462	0.11676675E-03
419 467	-0.67011817E-04	419 469	-0.12503720E-03
419 470	-0.16501172E-03	419 481	-0.90979039E-04
419 482	-0.96517032E-04	419 484	-0.63009778E-04
419 485	0.99067576E-03	419 486	-0.11429356E-02
419 487	-0.92385686E-03	419 488	0.76642772E-03
419 489	-0.74570439E-03	419 490	0.82034361E-03
419 491	0.17558062E-02	419 492	0.94659253E-03
419 493	0.79435924E-03	419 494	0.94071286E-03
419 495	-0.97882840E-03	419 496	0.10962163E-03
419 497	0.10357214E-03	419 498	-0.90667209E-03
419 499	-0.29506607E-02	419 500	-0.80295256E-03
419 501	-0.26265368E-03	424 424	0.23300296E-02
424 430	0.17891524E-02	424 442	-0.10557089E-02
424 448	0.23241231E-03	424 453	0.10596093E-03
424 455	-0.65842716E-04	424 462	0.21381791E-03
424 467	0.45171819E-05	424 469	-0.57643890E-04
424 470	-0.12563796E-03	424 481	-0.17652753E-04
424 482	-0.23436368E-04	424 484	-0.14112366E-05
424 485	0.88971643E-03	424 486	-0.11175352E-02
424 487	-0.90888282E-03	424 488	0.68677868E-03
424 489	-0.69935549E-03	424 490	0.76953461E-03

Continued Table III.5

Between Buses	Coefficient	Between Buses	Coefficient
424 491	0.14382631E-02	424 492	0.85003068E-03
424 493	0.72866072E-03	424 494	0.84788841E-03
424 495	-0.94735482E-03	424 496	0.13886274E-03
424 497	0.13448681E-03	424 498	-0.87232002E-03
424 499	-0.29888158E-02	424 500	-0.75999018E-03
424 501	-0.19736402E-03	430 430	0.25911324E-02
430 442	-0.10699702E-02	430 448	0.92265167E-04
430 453	-0.16544654E-04	430 455	-0.14865301E-03
430 462	0.77292104E-04	430 467	-0.10049608E-03
430 469	-0.15863848E-03	430 470	-0.19691804E-03
430 481	-0.12697786E-03	430 482	-0.12932354E-03
430 484	-0.95557348E-04	430 485	0.98159583E-03
430 486	-0.11300361E-02	430 487	-0.91354316E-03
430 488	0.75150094E-03	430 489	-0.72817620E-03
430 490	0.80601871E-03	430 491	0.17681136E-02
430 492	0.93849794E-03	430 493	0.77893049E-03
430 494	0.93321967E-03	430 495	-0.96455821E-03
430 496	0.81456106E-04	430 497	0.75315052E-04
430 498	-0.89177489E-03	430 499	-0.29527298E-02
430 500	-0.78626419E-03	430 501	-0.24079997E-03
442 442	0.12192447E-01	442 448	-0.23307251E-02
442 453	-0.24147353E-02	442 455	-0.25475179E-02
442 462	-0.23399268E-02	442 467	-0.25018598E-02

Continued Table III.5

Between Buses	Coefficient	Between Buses	Coefficient
442 469	-0.25253345E-02	442 470	-0.25860649E-02
442 481	-0.25761274E-02	442 482	-0.25069397E-02
442 484	-0.24825612E-02	442 485	-0.11882936E-02
442 486	0.12244914E-01	442 487	0.89724361E-02
442 488	0.13002385E-02	442 489	0.95019228E-02
442 490	0.11224419E-03	442 491	-0.19523650E-02
442 492	-0.11745663E-02	442 493	0.41822320E-03
442 494	-0.11110806E-02	442 495	0.10410797E-01
442 496	-0.23817213E-02	442 497	-0.22701393E-02
442 498	0.92978440E-02	442 499	0.11321213E-01
442 500	0.94516426E-02	442 501	0.92154815E-02
448 448	0.17982081E-02	448 453	0.13635089E-02
448 455	0.10380084E-02	448 462	0.16795907E-02
448 467	0.11288144E-02	448 469	0.10478054E-02
448 470	0.94918115E-03	448 481	0.10872569E-02
448 482	0.10007443E-02	448 484	0.10346444E-02
448 485	0.17582621E-03	448 486	-0.23953649E-02
448 487	-0.21842455E-02	448 488	-0.58395718E-03
448 489	-0.19146896E-02	448 490	-0.25002239E-03
448 491	0.10165648E-04	448 492	0.12975032E-03
448 493	-0.37686876E-03	448 494	0.12992181E-03
448 495	-0.22096569E-02	448 496	0.87070814E-03
448 497	0.87469466E-03	448 498	-0.21018956E-02

Continued Table III.5

Between Buses	Coefficient	Between Buses	Coefficient
448 499	-0.42844749E-02	448 500	0.19664455E-02
448 501	-0.13931654E-02	453 453	0.14903334E-02
453 455	0.11784374E-02	453 462	0.13704603E-02
453 467	0.12385142E-02	453 469	0.11125396E-02
453 470	0.10979967E-02	453 481	0.10325729E-02
453 482	0.95633929E-03	453 484	0.11442534E-02
453 485	0.15307513E-03	453 486	0.24767665E-02
453 487	-0.22652359E-02	453 488	0.63824420E-03
453 489	-0.20127357E-02	453 490	0.29834313E-03
453 491	-0.73754679E-04	453 492	0.10656897E-03
453 493	-0.42748521E-03	453 494	0.10671833E-03
453 495	-0.22975409E-02	453 496	0.95006544E-03
453 497	0.95262867E-03	453 498	0.21917196E-02
453 499	-0.42855739E-02	453 500	0.20606017E-02
453 501	-0.15120092E-02	455 455	0.18698119E-02
455 462	0.10461533E-02	455 467	0.13617885E-02
455 469	0.14471044E-02	455 470	0.12501238E-02
455 481	0.10804140E-02	455 482	0.10211901E-02
455 484	0.11882570E-02	455 485	0.80633151E-04
455 486	-0.26054634E-02	455 487	-0.23951794E-02
455 488	-0.74248458E-03	455 489	-0.21666947E-02
455 490	-0.38321129E-03	455 491	-0.19530556E-03
455 492	0.33852178E-04	455 493	-0.51974458E-03

Continued Table III.5

Between Buses	Coefficient	Between Buses	Coefficient
455 494	-0.34417011E-04	455 495	-0.24363750E-02
455 496	0.97779626E-03	455 497	0.97861257E-03
455 498	-0.23333931E-02	455 499	-0.42873322E-02
455 500	-0.22085069E-02	455 501	-0.16985701E-02
462 462	0.16414234E-02	462 467	0.11359707E-02
462 469	0.10584719E-02	462 470	0.95643592E-03
462 481	0.11040906E-02	462 482	0.10155372E-02
462 484	0.10410275E-02	462 485	0.16843007E-03
462 486	-0.24046886E-02	462 487	-0.21937236E-02
462 488	-0.59575680E-03	462 489	-0.19227362E-02
462 490	-0.25959359E-03	462 491	-0.34371624E-05
462 492	0.12237851E-03	462 493	-0.38723740E-03
462 494	0.12262295E-03	462 495	-0.22185929E-02
462 496	0.87508303E-03	462 497	0.87933428E-03
462 498	-0.21104305E-02	462 499	-0.42968131E-02
462 500	-0.19745529E-02	462 501	-0.14002642E-02
467 467	0.14678217E-02	467 469	0.12372520E-02
467 470	0.12098162E-02	467 481	0.10124422E-02
467 482	0.95144379E-03	467 484	0.12613074E-02
467 485	0.10964162E-03	467 486	-0.25619129E-02
467 487	-0.23500707E-02	467 488	-0.70187449E-03
467 489	-0.21097024E-02	467 490	-0.35318057E-03
467 491	-0.14773135E-03	467 492	0.62603998E-04

Continued Table III.5

Between Buses	Coefficient	Between Buses	Coefficient
467 493	-0.48566935E-03	467 494	0.62866471E-04
467 495	-0.23874633E-02	467 496	0.96613238E-03
467 497	0.96752960E-03	467 498	-0.22826307E-02
467 499	-0.43085850E-02	467 500	-0.21544024E-02
467 501	-0.16247737E-02	469 469	0.25381532E-02
469 470	0.10939038E-02	469 481	0.15784288E-02
469 482	0.15188074E-02	469 484	0.10773495E-02
469 485	0.36344237E-04	469 486	-0.25875934E-02
469 487	-0.23785497E-02	469 488	-0.77139097E-03
469 489	-0.21170366E-02	469 490	-0.42000971E-03
469 491	-0.22385418E-03	469 492	-0.95546966E-05
469 493	-0.55435136E-03	469 494	-0.79510755E-05
469 495	-0.24070437E-02	469 496	0.88511477E-03
469 497	0.89120026E-03	469 498	-0.22983081E-02
469 499	-0.43961293E-02	469 500	-0.21642102E-02
469 501	-0.16146137E-02	470 470	0.25107446E-02
470 481	0.84859179E-03	470 482	0.79452013E-03
470 484	0.11967563E-02	470 485	0.70818350E-04
470 486	-0.26493405E-02	470 487	-0.24346099E-02
470 488	-0.79267215E-03	470 489	-0.21718184E-02
470 490	-0.41513983E-03	470 491	-0.20973884E-03
470 492	0.21608488E-04	470 493	-0.55571971E-03
470 494	0.20683932E-04	470 495	-0.24657308E-02

Continued Table III.5

Between Buses	Coefficient	Between Buses	Coefficient
470 496	0.10257100E-02	470 497	0.10259873E-02
470 498	-0.23543716E-02	470 499	-0.44871941E-02
470 500	-0.22194120E-02	470 501	-0.16617731E-02
481 481	0.30327945E-02	481 482	0.22589362E-02
481 484	0.90313167E-03	481 485	0.29934663E-05
481 486	-0.26365686E-02	481 487	-0.24263035E-02
481 488	-0.78376336E-03	481 489	-0.21779374E-02
481 490	-0.43427618E-03	481 491	-0.22662080E-03
481 492	-0.42578030E-04	481 493	-0.56966440E-03
481 494	-0.39841630E-04	481 495	-0.24606090E-02
481 496	0.78986305E-03	481 497	0.79688895E-03
481 498	-0.23539872E-02	481 499	-0.43902955E-02
481 500	-0.22225333E-02	481 501	-0.16895805E-02
482 482	0.27968313E-02	482 484	0.84969052E-03
482 485	-0.34424738E-05	482 486	-0.25582195E-02
482 487	-0.23588820E-02	482 488	-0.73957559E-03
482 489	-0.21654314E-02	482 490	-0.41527836E-03
482 491	-0.24666730E-03	482 492	-0.45465087E-04
482 493	-0.54383696E-03	482 494	-0.41385996E-04
482 495	-0.24071871E-02	482 496	0.74896984E-03
482 497	0.75526186E-03	482 498	-0.23139508E-02
482 499	-0.40418580E-02	482 500	-0.22000766E-02
482 501	-0.17497493E-02	484 484	0.28662747E-02

Continued Table III.5

Between Buses	Coefficient	Between Buses	Coefficient
484 485	0.15191649E-03	484 486	-0.25434913E-02
484 487	-0.23301365E-02	484 488	-0.68151415E-03
484 489	-0.20862531E-02	484 490	-0.32423576E-03
484 491	-0.11662119E-03	484 492	0.10382221E-03
484 493	-0.45816274E-03	484 494	0.10279186E-03
484 495	-0.23668152E-02	484 496	0.10540823E-02
484 497	0.10530127E-02	484 498	-0.22610144E-02
484 499	-0.43174065E-02	484 500	-0.21320863E-02
484 501	-0.15945821E-02	484 485	0.19922305E-02
485 486	-0.12434938E-02	485 487	-0.10208949E-02
485 488	0.73609687E-03	485 489	-0.87635382E-03
485 490	0.12247891E-02	485 491	0.11212279E-02
485 492	0.18586260E-02	485 493	0.10519014E-02
485 494	0.18482436E-02	485 495	-0.10904095E-02
485 496	0.44253747E-03	485 497	0.43822545E-03
485 498	-0.10224374E-02	485 499	-0.29208914E-02
485 500	-0.92737586E-03	485 501	-0.42790500E-03
486 486	0.12459170E-01	486 487	0.90004391E-02
486 488	0.12532743E-02	486 489	0.94724446E-02
486 490	0.55189651E-04	486 491	-0.19921833E-02
486 492	-0.12316783E-02	486 493	0.36185747E-03
486 494	-0.11695402E-02	486 495	0.10432884E-01
486 496	-0.24364416E-02	486 497	-0.23309726E-02

Continued Table III.5

Between Buses	Coefficient	Between Buses	Coefficient
486 498	0.92969350E-02	486 499	0.11790324E-01
486 500	0.94359815E-02	486 501	0.90854279E-02
487 487	0.93306899E-02	487 488	0.14331324E-02
487 489	0.84359049E-02	487 490	0.26647699E-03
487 491	-0.16986469E-02	487 492	-0.10135015E-02
487 493	0.57491520E-03	487 494	-0.95681450E-03
487 495	0.88671334E-02	487 496	-0.22172378E-02
487 497	-0.21168410E-02	487 498	0.84700956E-02
487 499	0.92833489E-02	487 500	0.83796828E-02
484 501	0.82678869E-02	488 488	0.43808259E-02
488 489	0.14976307E-02	488 490	0.19267956E-02
488 491	0.66795269E-03	488 492	0.70301047E-03
488 493	0.22492378E-02	488 494	0.70728710E-03
488 495	0.13689655E-02	488 496	-0.45537133E-03
488 497	-0.45590801E-03	488 498	0.13673571E-02
488 499	-0.29304903E-03	488 500	0.14306046E-02
488 501	0.18910142E-02	489 489	0.10261241E-01
489 490	0.39815204E-03	489 491	-0.17481386E-02
489 492	-0.84847444E-03	489 493	0.68853306E-03
489 494	-0.77596073E-03	489 495	0.94896219E-02
489 496	-0.20306068E-02	489 497	-0.18816642E-02
489 498	0.96273608E-02	489 499	0.80062374E-02
489 500	0.10095887E-01	489 501	0.10526732E-01

Continued Table III.5

Between Buses	Coefficient	Between Buses	Coefficient
490 490	0.46781860E-02	490 491	0.85167144E-03
490 492	0.11879785E-02	490 493	0.28020230E-02
490 494	0.11855785E-02	490 495	0.20519557E-03
490 496	-0.69937479E-04	490 497	-0.72021692E-04
490 498	0.24614157E-03	490 499	-0.17384745E-02
490 500	0.33202720E-03	490 501	0.86527015E-03
491 491	0.31111222E-02	491 492	0.10341478E-02
491 493	0.82533177E-03	491 494	0.99695171E-03
491 495	-0.18762185E-02	491 496	0.72044320E-04
491 497	0.59672471E-04	491 498	-0.18124774E-02
491 499	-0.32122438E-02	491 500	-0.17705373E-02
491 501	-0.14298861E-02	492 492	0.50544030E-02
492 493	0.10123663E-02	492 494	0.41262060E-02
492 495	-0.10735162E-02	492 496	0.39543537E-03
492 497	0.39372453E-03	492 498	-0.10034386E-02
492 499	-0.29638503E-02	492 500	-0.90213585E-03
492 501	-0.38418360E-03	493 493	0.39161518E-02
493 494	0.10096149E-02	494 495	0.50808186E-03
493 496	-0.21443574E-03	493 497	-0.21590223E-03
493 498	0.54122367E-03	493 499	-0.14281529E-02
493 500	0.62040635E-03	493 501	0.11505925E-02
494 494	0.46973042E-02	494 495	-0.10081034E-02
494 496	0.39348751E-03	494 497	0.39303442E-03

Continued Table III.5

Between Buses	Coefficient	Between Buses	Coefficient
494 498	-0.93733565E-03	494 499	-0.29418282E-02
494 500	-0.83202356E-03	494 501	-0.30053430E-03
495 495	0.11952706E-01	495 496	-0.22771612E-02
495 497	-0.21559049E-02	495 498	0.92389658E-02
495 499	0.10462292E-01	495 500	0.94165243E-02
495 501	0.93734376E-02	496 496	0.23896298E-02
496 497	0.15109484E-02	496 498	-0.21838108E-02
496 499	-0.40373578E-02	496 500	-0.20700048E-02
496 501	-0.15874014E-02	497 497	0.16554841E-02
497 498	-0.20554750E-02	497 499	-0.41135884E-02
497 500	-0.19294436E-02	497 501	-0.13900248E-02
498 498	0.11270564E-01	498 499	0.86972452E-02
498 500	0.95302239E-02	498 501	0.96797980E-02
499 499	0.27582373E-01	499 500	0.83873420E-02
499 501	0.46206451E-02	500 500	0.10369241E-01
500 501	0.10274608E-01	501 501	0.12022708E-01

APPENDIX IV

COEFFICIENTS OF TIE POWER MODEL

The coefficients of the tie power model obtained from the base case 65% load flow data are shown in Table IV.1.

Table IV.1 Coefficients of Tie Power Model

Between Buses		Coefficient	Between Buses		Coefficient
1A	G1	0.25983584E 00	1A	G2	0.25983584E 00
1A	G3	0.25983584E 00	1A	G4	0.26619017E-01
1A	G5	-0.16910782E 01	1A	G6	-0.32079852E 00
1A	G7	0.49182630E 00	1A	G8	0.76774149E 01
1A	G9	-0.77981517E-15	1A	G10	-0.64213409E 01
1A	G11	0.10080785E 00	1A	G12	-0.58285713E-01
1A	G13	-0.25554485E 01	1A	G14	-0.86625023E 01
1A	G15	-0.41417251E 02	1A	G16	0.10556713E 02
1A	G17	-0.46441174E 01	1A	G18	0.23239202E 01
1A	G19	0.27632675E 02	1A	G20	-0.22774309E 00
1A	G21	-0.71984100E 00	1A	G22	0.19109869E 01
1A	G23	0.29487103E 00	1A	G24	-0.35428953E 00
1A	G25	0.42747533E 00	1A	G26	-0.14261799E 01
1A	G27	0.47066242E 00	1A	G28	0.16160190E 00
1A	G29	0.17231874E 01	1A	G30	-0.70572650E 00
1A	G31	-0.43299413E 00	1A	G32	-0.15035591E 01
1A	G33	-0.11492006E 02	1A	G34	0.70526397E 00

Continued Table IV.1

Between Buses		Coefficient	Between Buses		Coefficient
1A	G35	0.25983584E 00	1A	G36	0.83554804E 00
1A	G37	0.25983584E 00	1A	EA	-0.11015148E 01
1A	EB	-0.24280798E 00	1A	EC	-0.85143465E 00
1A	ED	-0.11087894E 01	2A	G1	-0.10750496E 00
2A	G2	-0.10750496E 00	2A	G3	-0.10750496E 00
2A	G4	-0.56819701E 00	2A	G5	-0.12654459E 00
2A	G6	0.20532131E-02	2A	G7	-0.21887243E 00
2A	G8	0.21419662E 02	2A	G9	0.32707521E-15
2A	G10	-0.21283264E 02	2A	G11	-0.21631021E-01
2A	G12	0.52354729E 00	2A	G13	-0.58878994E 01
2A	G14	0.44690161E 01	2A	G15	0.46847534E 01
2A	G16	0.44948168E 01	2A	G17	0.36383047E 01
2A	G18	-0.31941807E 00	2A	G19	-0.31941807E 00
2A	G20	0.52566569E-01	2A	G21	-0.16819751E 00
2A	G22	0.17210207E 01	2A	G23	0.10692412E 00
2A	G24	0.39609279E-01	2A	G25	-0.34719038E 00
2A	G26	0.13293940E 00	2A	G27	0.28712791E 00
2A	G28	-0.57436949E 00	2A	G29	0.10685170E 00
2A	G30	0.10456520E 00	2A	G31	-0.11055298E 01
2A	G32	0.42826730E 00	2A	G33	-0.77536726E 01
2A	G34	-0.54466110E 00	2A	G35	-0.10750496E 00
2A	G36	-0.35889047E 00	2A	G37	-0.10750496E 00

Continued Table IV.1

Between Buses		Coefficient	Between Buses		Coefficient
2A	EA	0.48651087E 00	2A	EB	0.50368011E 00
2A	EC	-0.20983476E-01	2A	ED	0.49032515E 00
3A	G1	-0.12113190E 00	3A	G2	-0.12113190E 00
3A	G3	-0.12113190E 00	3A	G4	0.30835807E 00
3A	G5	0.58336180E 00	3A	G6	-0.51878300E-01
3A	G7	-0.30874002E 00	3A	G8	-0.42801406E 02
3A	G9	0.12246990E-15	3A	G10	0.42501586E 02
3A	G11	0.47086269E-01	3A	G12	0.38016719E 00
3A	G13	0.48824463E 01	3A	G14	0.23139896E 01
3A	G15	0.23429174E 01	3A	G16	-0.79604797E 01
3A	G17	0.19101734E 01	3A	G18	-0.41703939E 00
3A	G19	-0.24839506E 01	3A	G20	0.94051957E-01
3A	G21	0.49933660E 00	3A	G22	-0.85525292E 00
3A	G23	0.38547158E 00	3A	G24	0.12213379E 00
3A	G25	-0.17567372E 00	3A	G26	-0.15370542E 00
3A	G27	0.80767750E-01	3A	G28	0.35846639E 00
3A	G29	-0.35664219E 00	3A	G30	0.10853499E 00
3A	G31	-0.95458328E-01	3A	G32	0.36287159E 00
3A	G33	0.48334398E 01	3A	G34	-0.57462260E-01
3A	G35	-0.12113190E 00	3A	G36	-0.26518631E 00
3A	G37	-0.12113190E 00	3A	EA	-0.33673984E 00

Continued Table IV.1

Between Buses		Coefficient	Between Buses		Coefficient
3A	EB	-0.10866389E-01	3A	EC	-0.33870125E 00
3A	ED	-0.32391208E 00	4A	G1	-0.50276432E-01
4A	G2	-0.50276432E-01	4A	G3	-0.50276432E-01
4A	G4	0.15119320E 00	4A	G5	0.40369362E 00
4A	G6	0.24803169E-01	4A	G7	0.12450892E 00
4A	G8	0.48640487E 02	4A	G9	0.52786204E-15
4A	G10	-0.48889419E 02	4A	G11	-0.19976489E-01
4A	G12	-0.64260203E 00	4A	G13	-0.63138682E 00
4A	G14	0.11735272E 00	4A	G15	0.11397670E 02
4A	G16	-0.10430079E 01	4A	G17	-0.84611219E 00
4A	G18	-0.31172121E 00	4A	G19	-0.56687918E 01
4A	G20	0.10928679E-01	4A	G21	0.11177009E 00
4A	G22	-0.90614909E 00	4A	G23	-0.21841902E 00
4A	G24	-0.17721832E 00	4A	G25	0.19284631E-02
4A	G26	0.37176800E 00	4A	G27	0.10515249E 00
4A	G28	-0.18436122E 00	4A	G29	-0.48457348E 00
4A	G30	0.10028839E 00	4A	G31	0.37195230E 00
4A	G32	0.36092699E 00	4A	G33	0.34639921E 01
4A	G34	-0.37315689E-01	4A	G35	-0.50276432E-01
4A	G36	0.29385918E 00	4A	G37	-0.50276432E-01
4A	EA	0.71097612E-02	4A	EB	-0.11096907E 00
4A	EC	0.12337416E 00	4A	ED	0.18144250E-02

Continued Table IV.1

Between Buses		Coefficient	Between Buses		Coefficient
5A	G1	-0.11787705E-01	5A	G2	-0.11787705E-01
5A	G3	-0.11787705E-01	5A	G4	0.37450022E 00
5A	G5	0.94486928E 00	5A	G6	0.32000738E 00
5A	G7	-0.35339379E 00	5A	G8	-0.39606613E 02
5A	G9	-0.30982221E-15	5A	G10	0.38798080E 02
5A	G11	-0.74869990E-01	5A	G12	-0.79018235E-01
5A	G13	0.79952936E 01	5A	G14	0.22770233E 01
5A	G15	0.14785560E 02	5A	G16	-0.14848350E 02
5A	G17	0.68914614E 01	5A	G18	-0.12970409E 01
5A	G19	-0.91989460E 01	5A	G20	-0.39793253E 00
5A	G21	0.23221982E 00	5A	G22	-0.19658461E 01
5A	G23	0.16735241E-01	5A	G24	0.24310118E 00
5A	G25	0.23548388E 00	5A	G26	0.95175147E-01
5A	G27	-0.71612757E 00	5A	G28	0.50732750E 00
5A	G29	0.11414967E-01	5A	G30	-0.13897258E 01
5A	G31	0.11804590E 01	5A	G32	0.53979462E 00
5A	G33	0.13073770E 02	5A	G34	-0.12949038E 00
5A	G35	-0.11787705E-01	5A	G36	-0.61133609E-02
5A	G37	-0.11787705E-01	5A	EA	-0.68267000E 00
5A	EB	-0.59914643E 00	5A	EC	-0.77955722E-01
5A	ED	-0.68823785E 00	6A	G1	0.67134797E-01
6A	G2	0.67134797E-01	6A	G3	0.67134797E-01

Continued Table IV.1

Between Buses		Coefficient	Between Buses		Coefficient
6A	G4	-0.63672626E 00	6A	G5	0.85697156E 00
6A	G6	-0.86039323E 00	6A	G7	0.39690340E 00
6A	G8	0.31578659E 02	6A	G9	0.19181320E-15
6A	G10	-0.31694900E 02	6A	G11	0.51398761E-02
6A	G12	0.41391087E 00	6A	G13	-0.95849247E 01
6A	G14	0.13205169E 02	6A	G15	0.75806141E 01
6A	G16	0.24238388E 02	6A	G17	-0.90381832E 01
6A	G18	-0.13200665E 01	6A	G19	-0.37437668E 01
6A	G20	0.58446878E 00	6A	G21	-0.56190223E 00
6A	G22	0.13509560E 00	6A	G23	-0.29217440E 00
6A	G24	-0.62494957E 00	6A	G25	-0.12496262E 01
6A	G26	0.95005322E 00	6A	G27	-0.19600391E 00
6A	G28	0.29496455E 00	6A	G29	0.40650076E 00
6A	G30	0.85654891E 00	6A	G31	-0.56871092E 00
6A	G32	0.76018554E 00	6A	G33	-0.20404266E 02
6A	G34	-0.63490504E 00	6A	G35	0.67134797E-01
6A	G36	-0.17497972E-01	6A	G37	0.67134797E-01
6A	EA	0.31973833E 00	6A	EB	0.46889108E 00
6A	EC	-0.11074944E 01	6A	ED	0.12780809E 01
7A	G1	-0.17467970E 00	7A	G2	-0.17467970E 00
7A	G3	-0.17467970E 00	7A	G4	0.19499892E 00
7A	G5	0.18101943E 00	7A	G6	-0.19964701E 00
7A	G7	0.60572769E-01	7A	G8	-0.50263473E 02

Continued Table IV.1

Between Buses		Coefficient	Between Buses		Coefficient
7A	G9	0.26207030E-15	7A	G10	0.50366516E 02
7A	G11	0.71940898E-01	7A	G12	-0.23608762E 00
7A	G13	-0.25997906E 01	7A	G14	-0.39545593E 01
7A	G15	0.61470118E 01	7A	G16	-0.28845024E 01
7A	G17	-0.25193787E 01	7A	G18	0.75584209E 00
7A	G19	-0.36792488E 01	7A	G20	-0.78689336E-01
7A	G21	0.45762401E-01	7A	G22	-0.37541039E-01
7A	G23	0.11866927E 00	7A	G24	-0.90162754E-01
7A	G25	0.47830647E 00	7A	G26	0.18479478E 00
7A	G27	0.11572065E 01	7A	G28	-0.94911038E-01
7A	G29	-0.35389131E 00	7A	G30	-0.21831799E 00
7A	G31	-0.10785103E 01	7A	G32	-0.30271018E 00
7A	G33	0.90000610E 01	7A	G34	0.19664460E 00
7A	G35	-0.17467970E 00	7A	G36	-0.21423352E 00
7A	G37	-0.17467970E 00	7A	EA	-0.56374669E 00
7A	EB	-0.23928750E 00	7A	EC	-0.34024209E 00
7A	ED	-0.54796380E 00	8A	G1	-0.97413957E-01
8A	G2	-0.97413957E-01	8A	G3	-0.97413957E-01
8A	G4	0.23226571E 00	8A	G5	-0.77704131E-01
8A	G6	0.57663511E-01	8A	G7	-0.33143032E 00
8A	G8	-0.33310575E 01	8A	G9	-0.35847070E-15
8A	G10	0.34844427E 01	8A	G11	-0.41365884E-02
8A	G12	0.62635583E 00	8A	G13	0.51217871E 01

Continued Table IV.1

Between Buses		Coefficient	Between Buses		Coefficient
8A	G14	0.22658739E 01	8A	G15	-0.93164759E 01
8A	G16	-0.72933350E 01	8A	G17	0.56227236E 01
8A	G18	0.10092252E 00	8A	G19	0.43082256E 01
8A	G20	-0.39802421E-01	8A	G21	-0.20442748E 00
8A	G22	0.40757042E 00	8A	G23	-0.75694322E-01
8A	G24	-0.52576721E 00	8A	G25	0.13169688E 00
8A	G26	-0.67111713E 00	8A	G27	-0.53490472E 00
8A	G28	0.50439471E 00	8A	G29	0.13907099E 00
8A	G30	-0.65864026E-01	8A	G31	-0.25655413E 00
8A	G32	0.15142661E 00	8A	G33	-0.10711346E 01
8A	G34	-0.14167422E 00	8A	G35	-0.97413957E-01
8A	G36	-0.66135942E-01	8A	G37	-0.97413957E-01
8A	EA	-0.48299611E 00	8A	EB	-0.12424409E 00
8A	EC	-0.37450808E 00	8A	ED	-0.46724004E 00
9A	G1	-0.34272373E-01	9A	G2	-0.34272373E-01
9A	G3	-0.34272373E-01	9A	G4	-0.69879770E-01
9A	G5	0.18059659E 00	9A	G6	0.25246531E 00
9A	G7	-0.98015666E-01	9A	G8	0.84753838E 01
9A	G9	0.23339823E-15	9A	G10	-0.88902483E 01
9A	G11	-0.35236310E-01	9A	G12	-0.80924690E 00
9A	G13	0.45843277E 01	9A	G14	-0.33287849E 01
9A	G15	0.71612349E 01	9A	G16	0.13477516E 01
9A	G17	-0.41867552E 01	9A	G18	-0.72692036E-01

Continued Table IV.1

Between Buses		Coefficient	Between Buses		Coefficient
9A	G19	-0.48503819E 01	9A	G20	0.76594859E 00
9A	G21	0.87818562E-01	9A	G22	-0.12642508E 01
9A	G23	0.50971750E-01	9A	G24	0.47606742E 00
9A	G25	-0.76710283E-01	9A	G26	0.27767032E 00
9A	G27	-0.57855278E 00	9A	G28	-0.60155410E 00
9A	G29	-0.68808192E 00	9A	G30	-0.42072318E-01
9A	G31	0.18374968E 01	9A	G32	-0.18621451E 00
9A	G33	0.90161104E 01	9A	G34	0.72984039E-01
9A	G35	-0.34272373E-01	9A	G36	0.27468171E-01
9A	G37	-0.34272373E-01	9A	EA	0.97288489E-01
9A	EB	-0.28907776E 00	9A	EC	0.40676796E 00
9A	ED	0.76886832E-01	10A	G1	0.78449070E-01
10A	G2	0.78449070E-01	10A	G3	0.78449070E-01
10A	G4	0.30857801E 00	10A	G5	-0.12490243E 00
10A	G6	0.45792472E 00	10A	G7	-0.98947465E-01
10A	G8	-0.22475921E 02	10A	G9	-0.34423588E-15
10A	G10	0.22262039E 02	10A	G11	-0.17379709E-01
10A	G12	-0.31120121E 00	10A	G13	0.37096691E 01
10A	G14	-0.69646320E 01	10A	G15	-0.44854364E 01
10A	G16	-0.28518248E 01	10A	G17	-0.20711279E 01
10A	G18	0.45732349E 00	10A	G19	0.32182693E 01
10A	G20	0.34319180E 00	10A	G21	0.50633818E 00
10A	G22	-0.65231818E 00	10A	G23	-0.13721269E 00

Continued Table IV.1

Between Buses		Coefficient	Between Buses		Coefficient
10A	G24	0.22962153E 00	10A	G25	0.40704602E 00
10A	G26	0.27522820E 00	10A	G27	0.33705229E 00
10A	G28	-0.20960408E 00	10A	G29	-0.14041960E 00
10A	G30	-0.12633288E 00	10A	G31	0.61061352E 00
10A	G32	-0.28997022E 00	10A	G33	0.74232960E 01
10A	G34	0.21528578E 00	10A	G35	0.78449070E-01
10A	G36	-0.36527359E 00	10A	G37	0.78449070E-01
10A	EA	-0.10359144E 00	10A	EB	-0.41014117E 00
10A	EC	0.29457641E 00	10A	ED	-0.91618180E-01
11A	G1	0.55901714E-01	11A	G2	0.55901714E-01
11A	G3	0.55901714E-01	11A	G4	-0.14112097E 00
11A	G5	0.97079992E-01	11A	G6	0.74769556E-01
11A	G7	-0.24095541E-02	11A	G8	0.40947021E 02
11A	G9	0.42612534E-15	11A	G10	-0.41153335E 02
11A	G11	-0.71606159E-01	11A	G12	-0.20218968E 00
11A	G13	-0.42898693E 01	11A	G14	-0.22448123E 00
11A	G15	0.18860641E 02	11A	G16	-0.49790678E 01
11A	G17	0.69361639E 01	11A	G18	-0.38437212E 00
11A	G19	-0.12608890E 02	11A	G20	0.10175958E-01
11A	G21	0.11679590E 00	11A	G22	-0.20988721E 00
11A	G23	-0.42930788E 00	11A	G24	0.60665399E-01
11A	G25	0.92917238E-03	11A	G26	-0.10311470E 01
11A	G27	0.52913702E 00	11A	G28	-0.24184781E 00

Continued Table IV.1

Between Buses		Coefficient	Between Buses		Coefficient
11A	G29	-0.39340627E 00	11A	G30	0.29023498E 00
11A	G31	0.28359032E 00	11A	G32	-0.13893420E 00
11A	G33	0.80632315E 01	11A	G34	0.43064672E 00
11A	G35	0.55901714E-01	11A	G36	0.73336362E-02
11A	G37	0.55901714E-01	11A	EA	0.12260312E 00
11A	EB	0.10717469E 00	11A	EC	0.10710064E-01
11A	ED	0.12732154E 00	12A	G1	0.29880885E-01
12A	G2	0.29880885E-01	12A	G3	0.29880885E-01
12A	G4	0.68642079E-01	12A	G5	-0.65817910E 00
12A	G6	0.10368809E-01	12A	G7	0.17528081E 00
12A	G8	-0.50136271E 01	12A	G9	-0.21941610E-15
12A	G10	0.54842329E 01	12A	G11	0.11626501E-01
12A	G12	0.21700943E 00	12A	G13	0.13896011E-01
12A	G14	-0.21409349E 01	12A	G15	-0.59277210E 01
12A	G16	0.24194641E 01	12A	G17	-0.24336119E 01
12A	G18	0.10268241E 00	12A	G19	0.55869160E 01
12A	G20	-0.28537679E 00	12A	G21	0.20727819E 00
12A	G22	0.10330658E 01	12A	G23	0.15805852E 00
12A	G24	0.41027832E 00	12A	G25	0.22086787E 00
12A	G26	0.77667809E 00	12A	G27	-0.14322233E 01
12A	G28	0.11798412E 00	12A	G29	0.50444603E 00
12A	G30	-0.31314629E 00	12A	G31	-0.77031195E-01
12A	G32	-0.51230330E-01	12A	G33	-0.82063417E 01

Continued Table IV.1

Between Buses		Coefficient	Between Buses		Coefficient
12A	G34	-0.16767919E 00	12A	G35	0.29880885E-01
12A	G36	0.60127869E-01	12A	G37	0.29880885E-01
12A	EA	0.10079235E 00	12A	EB	-0.82683205E-01
12A	EC	0.18175465E 00	12A	ED	0.10251331E 00
13A	G1	0.10586452E 00	13A	G2	0.10586452E 00
13A	G3	0.10586452E 00	13A	G4	-0.24923122E 00
13A	G5	-0.56918329E 00	13A	G6	0.23266149E 00
13A	G7	0.16271698E 00	13A	G8	0.47534571E 01
13A	G9	-0.79053995E-16	13A	G10	-0.45643711E 01
13A	G11	0.82349553E-02	13A	G12	0.17764080E 00
13A	G13	-0.75809991E 00	13A	G14	0.62747067E 00
13A	G15	-0.11813530E 02	13A	G16	-0.11965904E 01
13A	G17	0.74045879E 00	13A	G18	0.38166219E 00
13A	G19	0.77625542E 01	13A	G20	-0.83178967E 00
13A	G21	-0.15295160E 00	13A	G22	0.68350440E 00
13A	G23	0.21106821E-01	13A	G24	0.19091052E 00
13A	G25	-0.54531962E-01	13A	G26	0.21784139E 00
13A	G27	0.49070811E 00	13A	G28	-0.38091421E-01
13A	G29	0.67845362E 00	13A	G30	0.15026009E 00
13A	G31	-0.66932499E 00	13A	G32	-0.13085413E 00
13A	G33	-0.59464598E 01	13A	G34	0.92362701E-01
13A	G35	0.10586452E 00	13A	G36	0.68994283E-01
13A	G37	0.10586452E 00	13A	EA	-0.86278433E 00

Continued Table IV.1

Between Buses		Coefficient	Between Buses		Coefficient
13A	EB	-0.97052395E 00	13A	EC	0.94137251E-01
13A	ED	-0.84918201E 00	14B	G1	-0.39843209E-02
14B	G2	-0.39843209E-02	14B	G3	-0.39843209E-02
14B	G4	-0.10671288E 00	14B	G5	0.30391771E 00
14B	G6	-0.29983621E-02	14B	G7	0.64990937E-01
14B	G8	-0.23486795E 01	14B	G9	-0.38570746E-15
14B	G10	0.20802498E 01	14B	G11	0.24639960E-01
14B	G12	-0.35285550E 00	14B	G13	0.98180270E 00
14B	G14	-0.18389661E-01	14B	G15	0.99463348E 01
14B	G16	0.59865952E 01	14B	G17	-0.64920177E 01
14B	G18	-0.24876660E 00	14B	G19	-0.65382452E 01
14B	G20	0.24061158E-01	14B	G21	-0.56669880E-01
14B	G22	-0.42317539E 00	14B	G23	0.96971631E-01
14B	G24	0.13345271E 00	14B	G25	-0.22326980E-01
14B	G26	0.82058507E 00	14B	G27	-0.31184763E 00
14B	G28	-0.28839999E 00	14B	G29	-0.47049958E 00
14B	G30	-0.32127779E-01	14B	G31	0.16121662E 00
14B	G32	0.20063633E 00	14B	G33	0.12255268E 01
14B	G34	-0.44288531E-01	14B	G35	-0.39843209E-02
14B	G36	-0.10546722E-01	14B	G37	-0.39843209E-02
14B	EA	0.11048698E 00	14B	EB	0.10478765E 00
14B	EC	0.45398510E-02	14B	ED	0.11164653E 00
15B	G1	-0.16780011E-01	15B	G2	-0.16780011E-01

Continued Table IV.1

Between Buses		Coefficient	Between Buses		Coefficient
15B	G3	-0.16780011E-01	15B	G4	0.51988512E 00
15B	G5	-0.13553309E 00	15B	G6	0.21910800E-02
15B	G7	0.26037169E 00	15B	G8	0.53560419E 01
15B	G9	0.10350909E-15	15B	G10	-0.52238836E 01
15B	G11	0.25595181E-01	15B	G12	0.27586050E-01
15B	G13	0.35494680E 01	15B	G14	-0.28375378E 01
15B	G15	-0.12363190E 02	15B	G16	-0.82543459E 01
15B	G17	0.65036392E 01	15B	G18	0.45729560E 00
15B	G19	0.69209690E 01	15B	G20	-0.84329307E-01
15B	G21	0.68369061E 00	15B	G22	0.59575641E 00
15B	G23	-0.67398130E-01	15B	G24	-0.81136286E-01
15B	G25	0.30060631E 00	15B	G26	-0.65238672E 00
15B	G27	0.43337129E-01	15B	G28	0.73885992E-02
15B	G29	-0.27669019E 00	15B	G30	-0.35683870E 00
15B	G31	-0.32074797E 00	15B	G32	-0.16759610E 00
15B	G33	0.53824196E 01	15B	G34	-0.17226923E 00
15B	G35	-0.16780011E-01	15B	G36	0.14776379E 00
15B	G37	-0.16780011E-01	15B	EA	-0.40674096E 00
15B	EB	-0.65698647E 00	15B	EC	0.23546308E 00
15B	ED	-0.39195859E 00	16B	G1	0.13085473E 00
16B	G2	0.13085473E 00	16B	G3	0.13085473E 00
16B	G4	0.37162888E 00	16B	G5	0.11791062E 00
16B	G6	0.31401079E-01	16B	G7	-0.52057600E 00

Continued Table IV.1

Between Buses		Coefficient	Between Buses		Coefficient
16B	G8	-0.43369064E 02	16B	G9	0.30092010E-15
16B	G10	0.43496231E 02	16B	G11	0.60859319E-01
16B	G12	0.71979040E 00	16B	G13	-0.65608282E 01
16B	G14	0.15997591E 01	16B	G15	-0.37092810E 01
16B	G16	0.38149748E 01	16B	G17	-0.25929612E 00
16B	G18	0.20588410E 00	16B	G19	0.36655884E 01
16B	G20	-0.18358582E 00	16B	G21	-0.26862111E-01
16B	G22	0.10846109E 01	16B	G23	0.19489610E 00
16B	G24	-0.34449100E 00	16B	G25	0.10639989E 00
16B	G26	0.47345549E-01	16B	G27	-0.49157679E 00
16B	G28	0.59037751E 00	16B	G29	-0.32028812E 00
16B	G30	-0.65697610E-01	16B	G31	-0.11853390E 01
16B	G32	-0.44640869E-01	16B	G33	-0.17663488E 01
16B	G34	-0.13894010E 00	16B	G35	0.13085473E 00
16B	G36	0.41875891E-01	16B	G37	0.13085473E 00
16B	EA	-0.63973558E 00	16B	EB	0.18198597E 00
16B	EC	-0.83499247E 00	16B	ED	-0.62646472E 00
17B	G1	-0.13780642E 00	17B	G2	-0.13780642E 00
17B	G3	-0.13780642E 00	17B	G4	-0.16535336E 00
17B	G5	0.43141335E 00	17B	G6	0.29892141E 00
17B	G7	0.84286332E-02	17B	G8	0.47915130E 02
17B	G9	-0.16286388E-15	17B	G10	-0.48531784E 02
17B	G11	0.43475627E-03	17B	G12	-0.10294086E 00

Continued Table IV.1

Between Buses		Coefficient	Between Buses		Coefficient
17B	G13	-0.11515112E 01	17B	G14	0.65603771E 01
17B	G15	0.19610336E 02	17B	G16	-0.52597599E 01
17B	G17	0.10820962E 02	17B	G18	-0.12449512E 01
17B	G19	-0.90384617E 01	17B	G20	-0.78067577E 00
17B	G21	-0.35911179E 00	17B	G22	-0.15089855E 01
17B	G23	-0.18044353E 00	17B	G24	0.63057804E 00
17B	G25	-0.45842218E 00	17B	G26	-0.11393967E 01
17B	G27	0.30894881E 00	17B	G28	-0.61358553E 00
17B	G29	0.31665868E 00	17B	G30	-0.55424124E-01
17B	G31	0.19805250E 01	17B	G32	0.59737647E 00
17B	G33	-0.80504093E 01	17B	G34	0.79890429E-01
17B	G35	-0.13780642E 00	17B	G36	-0.19973999E 00
17B	G37	-0.13780642E 00	17B	EA	0.38305056E 00
17B	EB	-0.45568413E 00	17B	EC	0.88072813E 00
17B	ED	0.34105712E 00	18B	G1	-0.51242113E-02
18B	G2	-0.51242113E-02	18B	G3	-0.51242113E-02
18B	G4	-0.18708217E 00	18B	G5	-0.42677999E 00
18B	G6	-0.28421909E 00	18B	G7	-0.16222548E 00
18B	G8	-0.54474334E 02	18B	G9	0.23981514E-15
18B	G10	0.55025756E 02	18B	G11	0.32902040E-01
18B	G12	0.25063169E 00	18B	G13	0.66398258E 01
18B	G14	-0.42784767E 01	18B	G15	-0.33536590E 02
18B	G16	-0.10809200E 02	18B	G17	0.47728806E 01

Continued Table IV.1

Between Buses		Coefficient	Between Buses		Coefficient
18B	G18	0.95891631E 00	18B	G19	0.18536804E 02
18B	G20	0.49896419E 00	18B	G21	-0.29644680E 00
18B	G22	0.86561841E 00	18B	G23	0.52745932E 00
18B	G24	-0.59174150E 00	18B	G25	0.74499845E-01
18B	G26	-0.14367962E 01	18B	G27	0.48622471E 00
18B	G28	0.94886672E 00	18B	G29	0.74379921E 00
18B	G30	0.21335199E-01	18B	G31	-0.11163874E 01
18B	G32	-0.46939772E 00	18B	G33	0.46001978E 01
18B	G34	-0.50146140E-01	18B	G35	-0.51242113E-02
18B	G36	0.55994022E 00	18B	G37	-0.51242113E-02
18B	EA	-0.23961473E 00	18B	EB	0.26323503E 00
18B	EC	-0.51341140E 00	18B	ED	-0.22905314E 00
19B	G1	0.19752120E-02	19B	G2	0.19752120E-02
19B	G3	0.19752120E-02	19B	G4	-0.13989210E 00
19B	G5	-0.17662722E 00	19B	G6	-0.71109235E-01
19B	G7	0.84339201E-01	19B	G8	0.42250442E 02
19B	G9	-0.20790340E-15	19B	G10	-0.42140899E 02
19B	G11	-0.11301452E 00	19B	G12	-0.41840333E 00
19B	G13	0.34424829E 00	19B	G14	-0.51085389E 00
19B	G15	0.11846010E 02	19B	G16	0.57214289E 01
19B	G17	-0.83964577E 01	19B	G18	-0.14967579E 00
19B	G19	-0.95403194E 01	19B	G20	0.57437100E-01
19B	G21	0.10688089E-01	19B	G22	-0.70906347E 00

Continued Table IV.1

Between Buses		Coefficient	Between Buses		Coefficient
19B	G23	0.14097620E-01	19B	G24	0.12667441E 00
19B	G25	0.14126670E 00	19B	G26	0.13806477E 01
19B	G27	0.19249672E 00	19B	G28	-0.37598228E 00
19B	G29	-0.14565229E 00	19B	G30	-0.42557448E-01
19B	G31	0.39916170E 00	19B	G32	0.71923255E-01
19B	G33	0.73413700E 00	19B	G34	0.26208812E 00
19B	G35	0.19752120E-02	19B	G36	-0.40076088E-01
19B	G37	0.19752120E-02	19B	EA	0.16524798E 00
19B	EB	0.10255200E 00	19B	EC	0.61971840E-01
19B	ED	0.16597217E 00	20C	G1	-0.18571377E-01
20C	G2	-0.18571377E-01	20C	G3	-0.18571377E-01
20C	G4	-0.53609347E 00	20C	G5	-0.32104665E 00
20C	G6	-0.46406907E 00	20C	G7	0.83400303E 00
20C	G8	-0.95390129E 01	20C	G9	0.13951122E-15
20C	G10	0.99381914E 01	20C	G11	0.11428452E 00
20C	G12	0.75057006E 00	20C	G13	0.55928154E 01
20C	G14	0.48784037E 01	20C	G15	-0.21881347E 02
20C	G16	-0.75251417E 01	20C	G17	-0.94691563E 00
20C	G18	0.79869191E 00	20C	G19	0.14309805E 02
20C	G20	-0.15121288E 01	20C	G21	-0.31870496E 00
20C	G22	-0.69918007E 00	20C	G23	-0.20378959E 00
20C	G24	-0.45142233E-01	20C	G25	-0.18661344E 00
20C	G26	0.58736652E 00	20C	G27	0.19441366E 01

Continued Table IV.1

Between Buses		Coefficient	Between Buses		Coefficient
20C	G28	-0.27222431E 00	20C	G29	0.10571070E 01
20C	G30	0.54343873E 00	20C	G31	-0.88826180E 00
20C	G32	-0.94968199E-01	20C	G33	-0.41840992E 01
20C	G34	0.15449762E-01	20C	G35	-0.18571377E-01
20C	G36	0.99004626E-01	20C	G37	-0.18571377E-01
20C	EA	0.61212305E-01	20C	EB	-0.37673545E 00
20C	EC	0.41221452E 00	20C	ED	0.86945593E-01
21C	G1	0.11701667E 00	21C	G2	0.11701667E 00
21C	G3	0.11701667E 00	21C	G4	0.15290397E 00
21C	G5	0.98902940E-01	21C	G6	0.14913583E 00
21C	G7	-0.37629630E-01	21C	G8	-0.29533033E 01
21C	G9	0.11260680E-15	21C	G10	0.27953854E 01
21C	G11	-0.33349689E-01	21C	G12	0.19368458E 00
21C	G13	-0.46147060E 01	21C	G14	-0.83782291E 00
21C	G15	0.57962694E 01	21C	G16	0.12960949E 01
21C	G17	0.14743137E 01	21C	G18	-0.28029817E 00
21C	G19	-0.27374516E 01	21C	G20	-0.83787870E 00
21C	G21	0.96469461E-01	21C	G22	0.83659946E-01
21C	G23	0.18093699E 00	21C	G24	0.33060950E 00
21C	G25	-0.28390858E-01	21C	G26	-0.91897929E-03
21C	G27	-0.27305841E 00	21C	G28	0.31207811E-01
21C	G29	-0.16889089E 00	21C	G30	-0.11679041E 00
21C	G31	0.14259392E 00	21C	G32	0.17211872E 00

Continued Table IV.1

Between Buses		Coefficient	Between Buses		Coefficient
21C	G33	0.47316730E 00	21C	G34	-0.24284061E-01
21C	G35	0.11701667E 00	21C	G36	-0.14936991E-01
21C	G37	0.11701667E 00	21C	EA	-0.90226233E-01
21C	EB	-0.22759821E-01	21C	EC	-0.58323670E-01
21C	ED	-0.99369108E-01	22C	G1	-0.80177247E-01
22C	G2	-0.80177247E-01	22C	G3	-0.80177247E-01
22C	G4	0.10956550E 00	22C	G5	0.16760152E-01
22C	G6	0.14933181E 00	22C	G7	-0.32285112E 00
22C	G8	0.50255432E 01	22C	G9	-0.44501338E-16
22C	G10	-0.50817480E 01	22C	G11	-0.22897981E-01
22C	G12	-0.35916942E 00	22C	G13	0.17311144E 01
22C	G14	0.19907064E 01	22C	G15	-0.73104763E 01
22C	G16	-0.31479006E 01	22C	G17	0.58958282E 01
22C	G18	-0.98167121E-01	22C	G19	0.21081867E 01
22C	G20	0.90342271E 00	22C	G21	-0.19664490E 00
22C	G22	0.50515980E 00	22C	G23	-0.40236641E-01
22C	G24	-0.38141543E 00	22C	G25	0.38064700E-01
22C	G26	-0.71859151E 00	22C	G27	-0.60998219E 00
22C	G28	0.37014759E 00	22C	G29	0.18036783E 00
22C	G30	-0.55620190E-01	22C	G31	-0.54697617E-02
22C	G32	0.14870670E-01	22C	G33	-0.48272431E 00
22C	G34	0.38510390E-01	22C	G35	-0.80177247E-01
22C	G36	-0.11799908E 00	22C	G37	-0.80177247E-01

Continued Table IV.1

Between Buses		Coefficient	Between Buses		Coefficient
22C	EA	-0.33842593E 00	22C	EB	-0.99526822E-01
22C	EC	-0.25274551E 00	22C	ED	-0.32457954E 00
23C	G1	0.87596476E-01	23C	G2	0.87596476E-01
23C	G3	0.87596476E-01	23C	G4	0.24392810E-01
23C	G5	-0.36379969E 00	23C	G6	0.39826292E 00
23C	G7	-0.31080532E 00	23C	G8	0.12220230E 02
23C	G9	-0.28667068E-15	23C	G10	-0.12216200E 02
23C	G11	-0.49801990E-01	23C	G12	-0.40744442E 00
23C	G13	-0.34673243E 01	23C	G14	-0.54038172E 01
23C	G15	0.11582050E 02	23C	G16	0.81803570E 01
23C	G17	-0.56827669E 01	23C	G18	-0.38564380E-01
23C	G19	-0.59179859E 01	23C	G20	0.61479592E 00
23C	G21	0.26592880E 00	23C	G22	0.79386473E 00
23C	G23	0.84196090E-01	23C	G24	0.28685868E 00
23C	G25	0.12240767E 00	23C	G26	0.34998530E 00
23C	G27	-0.57038927E 00	23C	G28	-0.16722250E 00
23C	G29	-0.39013028E 00	23C	G30	-0.22076809E 00
23C	G31	0.81812679E-01	23C	G32	-0.22287530E 00
23C	G33	-0.17528019E 01	23C	G34	0.62686502E-01
23C	G35	0.87596476E-01	23C	G36	0.10292572E 00
23C	G37	0.87596476E-01	23C	EA	0.50465554E 00
23C	EB	0.52849817E 00	23C	EC	-0.70080719E-02
23C	ED	0.48782104E 00			

REFERENCES

Aldrich, J. F., H. H. Happ, and J. F. Leuer, "Multi-Area Dispatch," IEEE Trans. Power App. Syst., Vol. 90, No. 6, 1971, pp. 2661-2670.

Aldrich, J. F., H. H. Happ, and J. R. Leuer, "Power Dispatch in Multiareas," Proc. of the American Power Conference, Vol. 33, 1971, pp. 1084-1093.

Cohn, C., "Control of Generation and Power Flow on Interconnected Systems," John Wiley & Sons, Inc., New York, 1958.

Davison, G. R., "Dividing Load Between Units," Electrical World, December 23, 1922.

Denno, K. I., "Power System Identification in the Power Flow Reference Frame," J. Appl. Sci. & Eng. A., Vol. 2, 1977, pp. 141-153.

Estrada, H., "Economical Load Allocation," Electrical World, October 11, 1930.

Fink, L. H., "An Economic Dispatch Technique for PJM," Research Division, Report No. E-195, Philadelphia Electric Co., August, 1970.

Fink, L. H., "Concerning Power System Control Structures," ISA, Advances in Instrumentation, Vol. 26, Part I, 1971.

George, E. E., "Intrasystem Transmission Losses," AIEE Trans. Power App. Syst., Vol. 62, March, 1943, pp. 153-158.

George, E. E., H. W. Page, and J. B. Ward, "Coordination of Fuel Cost and Transmission Loss by Use of the Network Analyzer to Determine Plant Loading Schedules," AIEE Trans. Power App. Syst., Vol. 68, Part II, 1949, pp. 1152-1160.

Glimn, A. F., L. K. Kirchmayer, and G. W. Stagg, "Analysis of Losses in Interconnected Systems," AIEE Trans. Power App. Syst., Vol. 71, Part III, 1952, pp. 796-808.

Glimn, A. F., L. K. Kirchmayer, and J. J. Skiles, "Improved Method of Interconnecting Transmission Loss Formulas," AIEE Trans. Power App. Syst., Vol. 77, 1958, pp. 755-760.

Hahn, G. R., "Load Division by the Increment Method," Power, June, 1931.

Happ, H. H., L. K. Kirchmayer, J. F. Hohenstein, and G. W. Stagg, "Direct Calculation of Transmission Loss Formulae-II," IEEE Trans. Power App. Syst., Vol. 83, 1964, pp. 702-707.

Happ, H. H., "Multicomputer Configurations and Diakoptics: Dispatch of Real Power in Power Pools," IEEE Trans. Power App. Syst., Vol. 88, May, 1969, pp. 764-772.

Happ, H. H., "The Inter-Area Matrix: A Tie Flow Model for Power Pools," IEEE Trans. Power App. Syst., Vol. 90, No. 1, 1971, pp. 36-45.

Happ, H. H., "Optimal Power Dispatch, "IEEE Trans. Power App. Syst., Vol. 93, No. 3, 1974, pp. 820-830.

Happ, H. H., and N. E. Nour, "Interconnection Modelling of Power Systems," IEEE Trans. Power App. Syst., Vol. 94, No. 3, 1975, pp. 884-893.

Happ, H. H., and N. E. Nour, "Multiarea Network Modelling for Power Pools," IEEE Trans. Power App. Syst., Vol. 95, No. 2, March, 1976, pp. 586-594.

Kerr, R. H., and L. K. Kirchmayer, "Theory of Economic Operation of Interconnected Areas," AIEE Trans. Power App. Syst., Vol. 78, Part IIIA, 1959, pp. 647-653.

Kirchmayer, L. K., and G. W. Stagg, "Analysis of Total and Incremental Losses in Transmission Systems," AIEE Trans. Power App. Syst., Vol. 70, Part II, 1951, pp. 1197-1205.

Kirchmayer, L. K., and G. W. Stagg, "Evaluation of Methods of Coordinating Incremental Fuel Costs and Incremental Transmission Losses," AIEE Trans. Power App. Syst., Vol. 71, Part III, 1952, pp. 513-520.

Kirchmayer, L. K., "Economic Operation of Power Systems," John Wiley & Sons, Inc., New York, 1958.

Kirchmayer, L. K., "Economic Control of Interconnected Systems," John Wiley & Sons, Inc., New York, 1959.

Kron, G., "Tensorial Analysis of Integrated Transmission Systems, Part I," AIEE Trans. Power App. Syst., Vol. 70, Part I, 1951, pp. 1239-1248.

Kron, G., "Tensorial Analysis of Integrated Transmission Systems, Part II," AIEE Trans. Power App. Syst., Vol. 71, Part III, 1952, pp. 502-512.

Kron, G., "Tensorial Analysis of Integrated Transmission Systems, Part III," AIEE Trans. Power App. Syst., Vol. 71, Part III, 1952, pp. 814-822.

Kron, G., "Tensorial Analysis of Integrated Transmission Systems, Part IV," AIEE Trans. Power App. Syst., Vol. 72, Part III, 1953, pp. 827-838.

Kron, G., "Diakoptics - The Piecewise Solution of Large Scale Systems," Mac Donald, London, 1963.

Meyer, W. S., and V. D. Albertson, "Improved Loss Formula Computation by Optimally Ordered Elimination Techniques," IEEE Trans. Power App. Syst., Vol. 90, No. 1, 1971, pp. 60-69.

Morrill, C. D., and J. A. Blake, "A Computer Economic Scheduling and Control of Power Systems," AIEE Trans. Power App. Syst., Vol. 74, Part III, 1955, pp. 1136-1141.

Shipley, R. B., and H. Hochdorf, "Exact Economic Dispatch-Digital Computer Solution," AIEE Trans. Power App. Syst., Vol. 75, Part III, December, 1956, pp. 1147-1153.

Stagg, G. W., and A. H. El-Abiad, "Computer Methods in Power System Analysis," McGraw Hill Book Company, New York, 1968.

Stahl, E. C. M., "Load Division in Interconnections," Electrical World, March 1, 1930.

Stahl, E. C. M., "Economic Loading of Generating Stations," Electrical Engineering, September, 1931.

Steinberg, M. J., and T. H. Smith, "Incremental Loading of Generating Stations," Electrical Engineering, October, 1933.

Steinberg, M. J., and T. H. Smith, "The Theory of Incremental Rates, Part I," Electrical Engineering, March, 1934.

Steinberg, M. J., and T. H. Smith, "The Theory of Incremental Rates, Part II," Electrical Engineering, April, 1934.

Steinberg, M. J., and T. H. Smith, "Economic Loading of Power Plants and Electric Systems," John Wiley & Sons, New York, 1943.

Squires, R. B., "Economic Dispatch of Generation Directly From Power System Voltages and Admittances," AIEE Trans. Power App. Syst., Vol. 79, Part III, 1961, pp. 1235-1244.

Veblen, O., "Analysis Situs," Providence, R. I.: American Mathematical Society, 1931.

Ward, J. B., J. R. Eaton, and H. W. Hale, "Total and Incremental Losses in Power Transmission Networks," AIEE Trans. Power App. Syst., Vol. 69, Part I, 1950, pp. 626-631.

Ward, J. B., "Economy Loading Simplified," AIEE Trans. Power App. Syst., Vol. 72, Part III, 1953, pp. 1306-1311.

Watson, R. E., and W. O. Stadlin, "The Calculation of Incremental Transmission Losses and the General Transmission Loss Equations," AIEE Trans. Power App. Syst., Vol. 78, Part IIIA, 1959, pp. 12-18.

Wilston, A., "Dividing Load Economically Among Power Plants," AIEE Journal, June, 1928.