POWER CHARACTERISTICS OF DISC TYPE AGITATOR IMPELLERS

BY

ISADORE RUBIN

A THESIS

Submitted to the Faculty Department
of Chemical Engineering

of

Newark College of Engineering

In Partial Fulfillment of the
Requirements for the Degree of

MASTER OF SCIENCE

In Chemical Engineering

Newark, New Jersey

1955

APPROVAL OF THESIS

FOR

DEPARTMENT OF CHEMICAL ENGINEERING
NEWARK COLLEGE OF ENGINEERING

BY

FACULTY COMMITTEE

APPROVED: ____________________

____

____

NEWARK, NEW JERSEY
JUNE, 1955

ABSTRACT

Experiments were conducted to determine the power required to drive disc type agitators and to observe the flowpattern and type of agitation produced in a baffled tank.

Power was measured by determining electrical energy input to a motor and subtracting motor, transmission and friction losses previously established by calibration. Impellers were operated at speeds from 800 to 3700 RPM.

Power requirements in the turbulent flow region were correlated by the equation $HP = \frac{Po\,L^5 N^3 \rho}{550\,g_c}$ which was derived theoretically.

Reports of previous work on agitator power are discussed.

The Power Numbers (Po) established for the turbulent range, were all less than one. This is considerably lower than the Power Number for most common commercial Impellers in baffled tanks, other than propellers. This means that at corresponding Reynolds numbers, discs absorb less power than paddles or turbines.

Effective agitation throughout the entire vessel was only obtained at peripheral speeds substantially above the 700 ft. per min. recommended in the literature.

Some of the impellers used went through a narrow critical speed range which caused vibration. Above and below this range there were no operating difficulties. These impellers should be adaptable and useful for industrial applications and may be directly connected to a standard motor without a speed reducer.

PREFACE

This paper deals with the horsepower required to drive disc type high speed agitation impellers mounted on a vertical shaft in a cylindrical vessel. Depth of impeller (parallel to shaft) to diameter of impeller ratios were all 10 to 1 or less for the impellers tested. The quality of agitation obtained is briefly described.

This investigation was undertaken because of a lack of information concerning these impellers in the literature and because of the possibility that these impellers would be suitable for direct connection to standard electric motors thus eliminating the gear mechanisms normally used to reduce impeller speeds.

The writer wishes to acknowledge the encouragement and help offered by Dr. Salamone and to express his appreciation to the management of Industrial Process Engineers for supplying the necessary equipment and space for conducting the tests.

TABLE OF CONTENTS

LIST OF FIGURES

LIST OF TABLES

TABLE I NOTATION

Symbol	Definition	Dimensions
D	Diameter of Vessel	ft.
H	Liquid Depth	ft.
K	Constant	
L	Impeller Diameter (also used as symbol for unit of length)	ft.
M	Radial length of impeller projection, such as, turbine blade	ft.
N	Rotational speed	Revolutions per minute, or revolutions per second
P	Impeller power	ft-lbs/sec
R	Number of baffles	
T	Thickness of impeller disc	ft.
a,b,c,d,e, f,h,i,j,l,m	Exponential constants	
b	Baffle width	ft.
f	Frequency of electric power supply	cycles per second
g	Acceleration of gravity	32 ft/sec^2
gc	Force-Mass Conversion Factor	32.2
κ	Constant	
s	Slip	
w	Impeller width (dimension parallel to shaft)	ft.

Symbol	Definition	Dimensions
y	Height of Impeller above vessel bottom	ft.
α	Constant	
μ	Liquid viscosity	lbs/ft-sec.
P	Liquid density	lbs/ft^3
Fr	Froude Number	Dimensionless
HP	Horsepower	(550 ft-lbs/sec. or 760 watts)
Po	Power Number	Dimensionless
Re	Reynolds Number	Dimensionless
ϕ	Power Function	Dimensionless

Symbols Used For Basic Units in Dimensional Analysis

Force - F

Mass - M

Length - L

Time - θ

I - INTRODUCTION

The use of agitators in chemical reaction and processing vessels is wide spread. The agitators used have many forms and many purposes. This paper deals only with agitators where the impeller is mounted on a vertical shaft on a center line of a vertical cylindrical vessel.

The problem of agitator design may be divided into two parts. First, it is necessary to select an agitator which will produce the required processing results such as, mixing, blending, heat transfer, etc. Second, it is necessary to determine the power required to drive the agitator. The selection of the correct agitator and the optimum type of impeller is still largely an art. No mathematical treatment of degree of mixing is attempted herein. The power required to drive disc agitators was investigated for reasons given below.

There has been a fair amount of information published during the last seven years on horsepower demands of various types of agitator impellers such as, propellers, paddles, and turbines. All of these impellers used commonly in industry, operate at speeds well below those of standard induction motors (1750 and 3500 RPM). It is necessary to use a mechanical speed reduction device (generally gears or belts and pulleys) between the motor and the impeller shaft for these applications.

These speed reducers, while expensive, are less costly than reducing the speed of the ordinary alternating current motors. The formula for the rotor speed of an induction motor is:

$$N = \frac{f \times 120}{\text{No.Poles}} \quad (1-S)$$

(See Dawes p 330) [12]

where, N is rotor speed in rpm, f is frequency of power supply (cyles per second), and s is slip.

Neglecting slip, Table II gives the corresponding rotor speed and number of poles for an induction motor operated on a 60 cycle per second power supply.

TABLE II

Number of Poles for 60 Cycle Motor Speeds

Number of Poles	Rotor Speed RPM
2	3600
4	1800
6	1200
8	900
12	600

Most impellers in industrial use operate well below the speeds in the above table. Turbines and pitched blade impellers generally operate between 50 and 200 r.p.m. Propellers run from 200 to 600 r.p.m.

The cost of building motors, especially in the small sizes becomes prohibitive over 8 poles. This is often aggravated in the chemical industry because of the frequent necessity for explosion proof motors. The greater the number of poles, the bigger the size of the motor and the heavier the explosion proof casing becomes for N.E.C.* Class I Group D motors. Consequently 1750 RPM motors (1800 RPM Synchronous speed) with gear reducers are commonly used to drive agitators.

Direct current motors can of course, be operated over a varying speed range by providing a variable resistance in the field circuit. This, however, would require in most industrial plants, the installation of an AC-DC motor generator set.

To provide an approximate picture of the cost of an acceptable industrial speed reducer Table III was prepared. An impeller speed for each motor horsepower was assumed, so that a standard AGMA** speed reducer model could be picked. The list price as of April 1955 of a right-angle motor-reducer built by a well-known manufacturer, was given. This unit is illustrated in Figure No. I. The cost of the corresponding motor is then listed in Table III and finally the approximate "List Price" of the gear reducer.

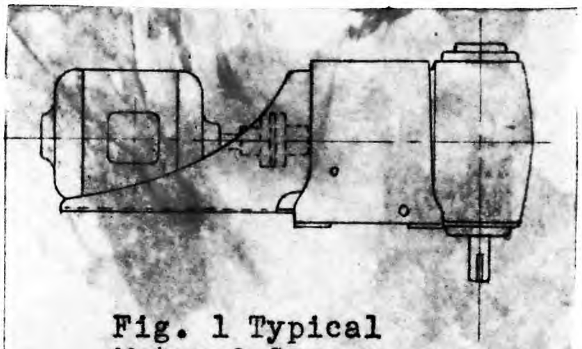

Fig. 1 Typical Motor & Gear Reducer

---

* National Electrical Code[3]
** American Gear Manufacturers Association

TABLE III

Gear Reducer Costs

HP	Assumed Impeller Speed-RPM	AGMA Class I* Motor Reducer List Price Dollars	Motor List Price Dollars	Gear Reducer Approximate List Price Dollars
1	190	518	117	401
1½	190	581	138	443
2	175	640	160	480
3	155	768	178	590
5	125	920	212	708
7½	100	1191	278	913
10	84	1548	351	1197
15	68	1847	422	1425
20	56	2025	555	1470

Discounts from list price for these items, as of the date of this paper, is about 40 to 50%, depending on the purchaser and quantity.

Obviously if a suitable impeller were available which could operate at say 1750 rpm, without excessive vibration, a considerable saving in cost would result by eliminating the speed reducer.

For the experimental work reported in this paper, impellers were chosen and operated at higher speeds so that the power requirements for these types of impellers could be determined, with the hope that the data obtained could be used for industrial applications, and also to determine if any particular operating difficulties would occur.

* Class I - for 8 hr/day operation

II Theoretical Considerations

A relationship may be derived by Dimensional Analysis for the power required to move a solid impeller through a fluid medium in a container of given geometry. Using the procedure as outlined by McAdams,[22] the basic dimensional units of force, mass length and time (F,M,L θ), and based on the physical arrangement shown in Figure II, we have:

$$(1)\quad P = \phi'(N, L, w, \rho, \mu, g, y, H, b, R, g_c, D)$$

In this equation, the power P required to drive the impeller, is assumed to be a function of all the variableson the right.

TABLE IV

Units and Symbols used in Dimensional Analysis

		Dimensions	
Symbol	Quantity	Units	Symbols
P	Power input	$\frac{\text{ft-lbs-force}}{\text{sec}}$	$\frac{LF}{\theta}$
N	Impeller Speed	$\frac{\text{rev}}{\text{sec}}$	$\frac{1}{\theta}$
L	Impeller Diameter	ft.	L
w	Impeller width	ft.	L
ρ	Liquid density	$\frac{\text{lbs-mass}}{\text{ft}^3}$	$\frac{M}{L^3}$
μ	Absolute viscosity of liquid	$\frac{\text{lbs-mass}}{\text{ft-sec}}$	$\frac{M}{L\theta}$
g	Acceleration of Gravity	ft/sec^2	$\frac{L}{\theta^2}$
y	Height of impeller above vessel bottom	ft.	L
H	Liquid Depth in vessel	ft.	L
b	Baffle width	ft.	L

R	Number of baffles	--	--
g_c	Force-Mass Conversion Factor	--	$\frac{ML}{F\theta^2}$
D	Tank Diameter	ft.	L

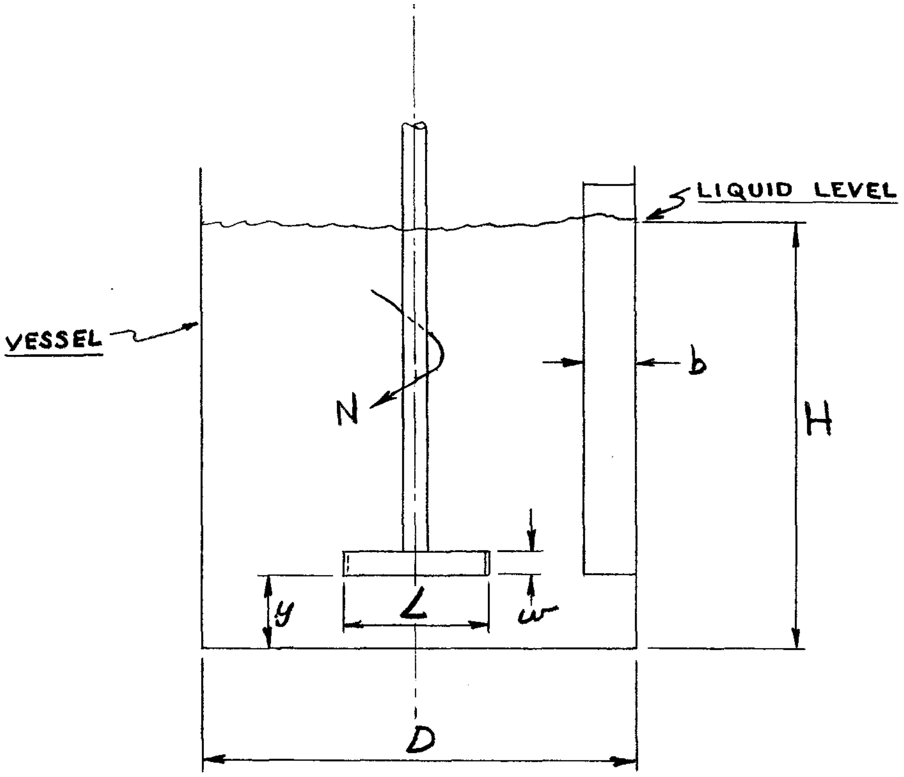

FIG. II
DIAGRAM OF TYPICAL
AGITATED VESSEL

Replacing the function (ϕ') by an infinite series, we have:

$$(2)\ P = \alpha N^{a} L^{b} w^{c} \rho^{d} \mu^{e} g^{f} y^{q} H^{i} b^{j} R^{l} g_c^{m} D^{n} + \alpha' N^{a'} L^{b'} w^{c'} \rho^{d'} \mu^{e'} g^{f'} y^{q'} H^{i'} b^{j'} R^{l'} g_c^{m'} D^{n'} + \alpha''(\cdots\cdots) + \cdots$$

Substituting the dimensional symbols for each factor

$$(3)\ \frac{LF}{\theta} = \alpha\left(\frac{1}{\theta}\right)^{a}(L)^{b}(L)^{c}\left(\frac{M}{L^3}\right)^{d}\left(\frac{M}{L\theta}\right)^{e}\left(\frac{L}{\theta^2}\right)^{f}(L)^{q}(L)^{i}(L)^{j}(1)^{l}\left(\frac{ML}{F\theta^2}\right)^{m}(L)^{n} + \alpha'(\cdots\cdots) + \cdots$$

The product of the dimensions in each term of the above infinite series must be $\frac{LF}{\theta}$ in order for the equation to be correct. We can therefore neglect the terms after the first and solve for the values of the exponents a, b, c, d, e, etc. so that the equation is dimensionally sound.

ΣF : $1 = -m$ (i)

ΣM : $0 = d + e + m$ (ii)

$\Sigma \theta$: $-1 = -a - e - 2f - 2m$ (iii)

ΣL : $1 = b + c - 3d - e + f + q + i + j + m + n$ (iv)

Solving (i): $\underline{m = -1}$

Solving (ii) in terms of e: $0 = d + e - 1$ $\underline{d = 1 - e}$

Solving (iii) in terms of e and f:
$-1 = -a - e - 2f + 2$ $\underline{a = 3 - e - 2f}$

Solving (iv) for b: $1 = b + 3 - 3(1-e) - e + f + q + i + j - 1 + n$
$\underline{b = 5 - c - 2e - f - q - i - j - n}$

Substituting these values of m, d, a, and b in equation (2) we have:

$$(4)\ P = \alpha(N)^{3-e-2f}(L)^{5-c-2e-f-q-i-j-n}(w)^{c}(\rho)^{1-e}(\mu)^{e}(g)^{f}(y)^{q}(D)^{n}(H)^{i}(b)^{j}(R)^{l}(g_c)^{-1}+\alpha'(\cdots)+\cdots$$

Since all the terms of the infinite series will have the same exponents, we can factor out all the terms except $\alpha, \alpha', \alpha''' \cdots$. Let the sum of the α terms be K. Rewriting equation 4 by combining terms with common exponents, we have

$$(5)\ P = K\left[\left(\frac{N^3L^5\rho}{g_c}\right)\left(\frac{\mu}{NL^2\rho}\right)^{e}\left(\frac{g}{N^2L}\right)^{f}\left(\frac{w}{L}\right)^{c}\left(\frac{y}{L}\right)^{q}\left(\frac{H}{L}\right)^{i}\left(\frac{b}{L}\right)^{j}(R)^{l}\left(\frac{D}{L}\right)^{n}\right]$$

The exponential form may be converted to:

$$(6)\ \frac{Pg_c}{N^3L^5\rho} = \phi\left(\frac{NL^2\rho}{\mu}\right)\left(\frac{N^2L}{g}\right)\left(\frac{w}{L}\right)\left(\frac{y}{L}\right)\left(\frac{H}{L}\right)\left(\frac{b}{L}\right)(R)\left(\frac{D}{L}\right)$$

The individual groups in this equation are all dimensionless.

The term at the left has been referred to as the Power number in the literature. $P_o = \dfrac{Pg_c}{N^3L^5\rho}$

The first two terms on the right have also been assigned names

$Re = \dfrac{NL^2\rho}{\mu}$ (Reynolds Number)

$Fr = \dfrac{N^2L}{g}$ (Froude Number)

The Reynolds Number although different in form from that encountered in fluid flow in pipes characterizes the effect of viscosity of the liquid on the system. Viscous, transition and turbulent regions of flow are observed. The Froude Number characterizes the effect of gravity on the system.

The remaining terms on the right are all linear ratios, which define the geometric boundaries of the system. If these ratios are held constant, then equation 6 can be written as

$$(7) \quad Po = K\left[\phi(Re)(Fr)\right]$$

Other geometric factors could also have been included in the above derivation such as, number of blades on the impeller, impeller pitch, baffle height and others. The result would have been additional terms in equation (6) which would have further defined the geometry of the system.

Equation (6) establishes the relationships which must be met in order to obtain geometric and dynamic similarity. Consequently, based on equation (6) it is possible to conduct experiments in which geometric and dynamic similarity are maintained except for one variable factor and the effect of varying each term can be determined.

This permits scale up of equipment from pilot plant scale to production scale if the relations of the factors on the pilot scale equipment have been established.

The above derivation is based on a single Newtonian liquid phase. If two liquid phases are present or a liquid-gas or liquid-solid system is under consideration the density and viscosity terms can frequently be taken as "averages" and satisfactory predictions of power requirements made. (See discussion of paper by Olney & Carlson,[25] p. 25). If non-Newtonian fluids are under consideration, the variation of viscosity with work applied, becomes an important factor and equation (6) should not be used without determining the relation between viscosity and power input. No non-Newtonian liquids were used in this experiment.

A derivation similar to that above is given by Rushton, Costich & Everett,[28] who did a considerable amount of work on convential paddles, turbines and propellers. The work of these authors, as well as that of White & Brenner,[35] O'Connel and Mack,[24] Lyons[19] and others, prove that for those cases where the surface of the liquid is substantially level (no cavitation), which result is obtained by "complete" baffling and the elimination of most of the swirl in the agitated liquid, the value of the Froude Number term in equation (5), is substantially unity.

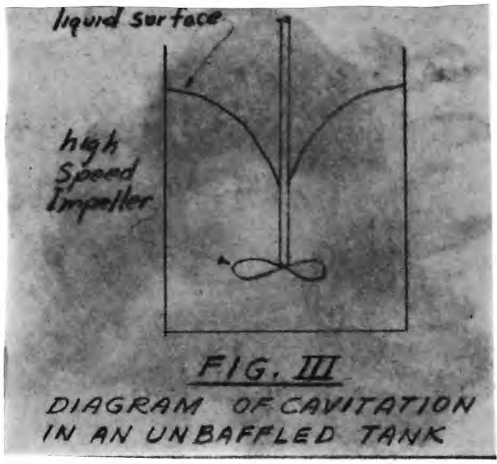

FIG. III
DIAGRAM OF CAVITATION IN AN UNBAFFLED TANK

Conversely when cavitation occurs as illustrated in Figure III, the effect of gravity and the value of the Froude Number become important. No runs were made in the experiments hereafter reported in which any appreciable cavitation occurred and consequently we will deal with equation:

$$(8) \quad Po = K \phi (Re) \qquad \text{or}$$

$$(8a) \quad \frac{Pgc}{N^3L^5\rho} = K \phi \left(\frac{L^2N}{\mu}\right)$$

where the value of the Froude number is one (1).

This same equation in an exponential form is:

$$(8b) \quad Po = K (Re)^e \qquad \text{or} \quad \frac{Pgc}{N^3L^5} = K \left(\frac{L^2N}{\mu}\right)^e$$

This equation plots in a similar manner to the friction factor vs Reynolds Number graphs, in fluid flow in pipes. A wide range of Reynolds Numbers is required in order to obtain a reasonable plot.

At high Reynolds Numbers, e approaches zero, the Power Number Reynolds Number curve becomes a horizontal straight line, and (8b) becomes:

$$(8c) \quad P = \frac{KL^5N^3\rho}{gc} \qquad \text{or} \quad HP = \frac{PoL^5N^3\rho}{550 \times gc}$$

Examining equation (8c), it may be seen that if all factors except impeller speed are held constant, this equation reduces to:

(9) $\frac{P}{N^3} = K(N)^a$ or

(9a) $\log P = a \log(N)^{3+a} + \log K$

This is also useful but more limited correlation for one particular impeller. It is however, much easier to determine experimentally.

III Review of Some Previous Reports on Agitator Horsepower

It is interesting to note that although mixing and agitation are as old as the chemical industry, no chemical engineering text book, of fairly wide use in this country, gave any practical information on the subject until "Unit Operations" by Brown et al [9] was published (1950). Badger and McCabe [4] in "Elements of Chemical Engineering" (1936) devote a chapter to "Mixing". They describe a few pieces of the available equipment and give one equation for the horsepower of paddles based on the work of White et al,[32,35,36] described below. They deplore the lack of information and theory on this unit operation.

Walker, Lewis, McAdams and Gilliland in "Principles of Chemical Engineering", McGraw Hill (1937) do not deal with the subject at all. Neither do Coulson and Richardson in "Chemical Engineering", Pergamon Press, London (1954); nor H. McCormack, editor of "Applications of Chemical Engineering", D. VanNostrand, New York (1940).

The second edition of the "Chemical Engineers Handbook",[1] J. H. Perry, editor (Published 1941) in section 14, by Valentine & MacLean, entitled "Mixing of Materials", gives correlations for two types of impellers. The first is for long arm paddles in unbaffled tanks based on the work of White and Summerford [34] in which they found that:

(10) $P = KL^{3}N^{2}D^{1.1}w^{0.3}H^{0.6}$

The second is for curved blade turbines. A basic curve is given (Page 1553, Fig. N) for impeller diameter vs horsepower at 700 ft/min peripheral speed. Supplemental curves are then given for various peripheral speeds vs % of horsepower shown on the first curve and % of horsepower shown on the first curve vs liquid viscosity.

It is not stated why 700 ft. per min. was chosen as a basic peripheral speed. It is not clear from the text in Perry what type of baffling was used. It would seem that the baffling was in the form of a stator or stationary deflecting blade ring.

The values given in Fig. N. mentioned above, are in good agreement with work performed by later experimenters and collected on Figure 477, page 507, of Brown's "Unit Operations"[9] (See curves 3, 4, and 5) for Reynolds Numbers over 10,000.

The third edition of the "Chemical Engineers Handbook"[2] (J. H. Perry, editor, published 1950) in Section 17, entitled "Mixing of Materials" repeats the information given in the second edition. The work of White and Summerford [34] it is claimed, predicts 30 to 60% higher power than actually absorbed by long arm paddle impellers.

"as Reynolds Number increases from 1000 to 100,000

(Zarber M.S. thesis in Ch.E. University of Kansas (1943)"

The third edition mentions the derivation of an equation such as, (8a) above, by Dimensional Analysis, but gives no correlation based on this equation. Mention is made of the work of Hixson and Baum [17] and Mack and Kroll [20] on the power absorbed by flat paddles in baffled tanks. Mention is also made on the work by Olney and Carlson [25] and Bissel [5] on power absorbed by turbines in baffled tanks, and of the work by Miller and Rushton for several marine propellers. A nomograph based on this last work for propeller horsepower requirements operating in water, are given. Another nomograph is provided based on the work of Olney and Carlson [25] who used a generalized equation:

$$(11)\quad HP = \alpha L^{4.70} N^{2.85} \rho^{0.85} \mu^{0.15}$$

Values of α are given for 6 different impellers. Values or ranges of $\frac{D}{L}$, $\frac{W}{L}$, $\frac{H}{D}$ & $\frac{L}{D}$ are stated for which the nomograph is applicable.

The earliest work consulted for the preparation of this paper was that of A. McLaren White and his associates at the University of North Carolina. They ran experiments on sand and water using paddle agitators. The results were reported in a number of papers. White, Summerford, Bryant and Lukens (1932) 32 described how they withdrew samples from the tank and plotted lines of equal sand concentration (mg sand/100 cc H_2O) for various paddle positions. Maximum suspension of solids was reported when the paddle was near the bottom of the tank. White and Summerford [33,34] (1933 and 1934) gave curves for sand distribution in water vs paddle speed. No power correlations were given in these two articles. White, Brenner, Phillips and Morrison (1934) [35] report extensive work on the power required to drive paddle agitators in several different size tanks and in several liquids. A dynamometer was used to measure power. This work is then correlated in a paper by White and Brenner.[36] These authors give the following theoretical equation for agitator power:

$$(12)\quad \frac{P}{\rho N^3 L^5} = K \left(\frac{\mu}{L^2 N}\right)^a \left(\frac{w}{L}\right)^b \left(\frac{H}{L}\right)^c \left(\frac{D}{L}\right)^d$$

which they state was derived by dimensional analysis. Using the data of the previous article, White and Brenner then proceed to evaluate the exponents a, b, c, and d, and the constant K. This is done by plotting the data so that all factors except one, remain constant. For example, by plotting log Power vs log RPM for a given paddle, they obtained a straight line:

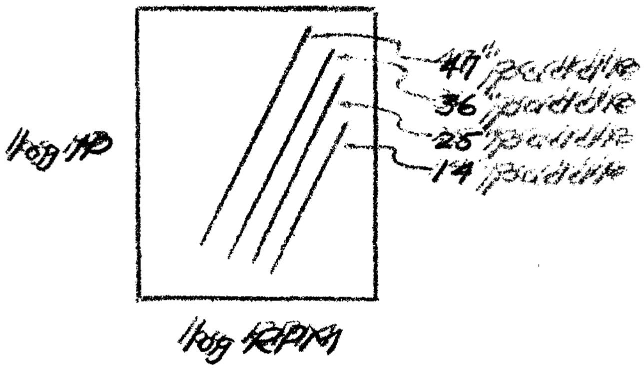

The slopes of these lines they found to deviate little from the value 2.9. Referring to equation (10) it is seen that N, the agitator speed occurs in two dimensionless groups, where all other factors being constant, we have:

$$(13)\quad \frac{P}{N^3} = K^1 \left(\frac{1}{N}\right)^a \quad \text{or (11a)} \quad P = K^1 N^{3-a}$$

$$(14)\quad \log P = (3-a)\log N + \log K^1$$

Equation (14) should be a straight line on a log-log plot as was found by the authors, in which (3-a) should be the slope of the line. As the slope was found to be 2.9 then "a" must equal 0.1.

By similar analysis the other exponents and the constant K were evaluated resulting in the final equation:

$$(15)\quad \frac{HP}{L\quad N^2 D^{1.1} w^{0.3} H^{0.6}} = 0.000129\left(\frac{L^2 N}{\mu}\right)^{0.86}$$

or

$$(16)\quad HP = 0.000129 L^{2.72} \mu^{0.14} N^{2.86} \rho^{0.86} D^{1.1} w^{0.3} H^{0.6}$$

White and Summerford [37] in a subsequent paper (1936) reported further work on the sand-water system. In this paper they show that maximum amount of sand is kept in suspension for a given paddle speed when the paddle length is approximately equal to the tank radius.

MacLean and Lyons (1938) [21] give a nomograph for computing the theoretical HP required to bring water to a given velocity with a turbine impeller.

Bissel (1938) [5] deals with side entering and off center top entering propeller agitator power.

Gunness and Baker (1938)[13] deal with performance of agitators rather than power.

Hixson and Baum [14,15,16,17] in a series of papers (1941 & 1942) discuss both a criterion for quality of agitation and the power requirements of turbine agitators. They used liquid-solid systems and measured the rate of solution of the solids. They found that different rate equations applied above and below the Reynolds Number 6.7 x 10^4. In their article on power requirements of turbines [20], they review previous work in the field and compare the accuracy of the reports on the basis on which the data was obtained as follows:

1. Best - Data based on dynamometer readings.
2. Next Best - Data based on power input to motor corrected for efficiency of motor and speed reducer at operating load (Power reported at high speeds they state should be fairly accurate)
3. Third Best - Data based on power input to motor corrected for no load readings at the same speed.
4. Pocrest - Power requirements based on calculated pumping capacity.

Hixson and Baum found that in the turbulent range (above $Re = 4 \times 10^4$) for turbines:

$$(17) \quad HP = 1.50 \times 10^{-10} N^{2.88} D^{4.76} \rho^{0.88} \mu^{0.12}$$

in an unbaffled vessel. Maximum power input is obtained just before the vortex reaches the impeller. Reference to a turbine in this paper means a flat blade set at an angle to the shaft centerline. Their blades were generally set at 45°. At high Reynolds Numbers they found that reversing the direction of rotation of the turbine had no appreciable effect on the power consumption. They found little deviation in power requirements for turbines located between $\frac{Y}{D} = \frac{1}{2}$ to $\frac{G}{D} = \frac{1}{3}$. No equation for horsepower in a baffled tank is given.

Stoops and Lovell (1943) [31] report on the power required to drive propeller agitators of the marine type in unbaffled tanks. They also start with an equation similar to (5) page 9 above and evaluate the exponents. Their result was:

$$(18) \quad P = 0.56 L^{3.7} N^{2.8} \rho^{0.8} \mu^{0.2} D^{0.9}$$

Bissell (1944) [6] discusses various problems connected with a research program on agitation. No correlations are given.

Cooper, Fernstrom and Miller (1944) [11] in an article on gas-liquid contacting deal principally with absorption of oxygen in water and oil. However, they report the power drawn by a vaned disc impeller with a $\frac{W}{L}$ ratio of 0.1. Between Reynolds Numbers of approximately 10^2 to 10^5 they obtained a constant value of the Power Number equal to 3.0. This curve has been replotted in Brown's "Unit Operations".[9]

This was the first reference found which dealt with power for impellers which approached the type used in the experiments reported below. The discs used were 2.44", 3.31", 3.88" and 6.38" in diameter and had 16 radial vanes attached to the lower face of the disc. Each vane originated at the periphery of the disc and extended about two-thirds of a radius toward the center.

Bissell, Miller & Everett (1945) [7] discuss the minimum vessel and impeller sizes which will permit reasonably accurate extrapolation of data from pilot plant to production set up.

The criteria to be established for impeller size and type are:

a. Geometrical similarity to production unit
b. Circulation pattern in vessel
c. Discharge velocity from impeller
d. A Reynolds Number relation

Based on experience, they state:

a. D/L should be between 3 and 4 @ $\mu >$ 400. Smaller impellers than this would not provide enough velocity to create turbulence throughout the tank, while larger impellers would cause a large energy loss at the tankwall.
b. The most desirable tank shape gives $\frac{H}{D} = 1.0$.
c. They recommend 700 ft/min as the peripheral speed

of the impeller for mixing immiscible liquids, gas absorption and dispersion and suspension of solids.

d. "It has been difficult to obtain satisfactory 'scale up' results for impellers smaller than 4 inches".

e. At $D/L = 3.5$; $D = 3.5 \times 4 = 14$ inches as a minimum pilot unit size where agitation measurements will be made for "scale up".

In order to evaluate experimental results, the authors suggest plotting log HP vs. log Re.

Other details of vessel construction and arrangement are discussed. For power studies a dynamometer is recommended.

Miller and Mann (1944) [23] present a considerable amount of information on agitation of one phase and of two phase systems of immiscible liquids.

They state:

> "It is shown that laboratory tests of the agitation of two phase liquid mixtures can be scaled up successfully by designing larger equipment which is geometrically similar to that used in the laboratory by applying equal power per unit volume in both sizes."

Power measurements were made by dynamometer. (The torque required to prevent vessel rotation was measured. The vessel was set on a table supported on ball bearings.)

The power data was plotted as Ø vs. Re. For paddles running in water, they obtained:

$$(19)\quad P = 4.33 \times 10^{-6} L^{4.52} N^{2.78} \rho^{0.78} \mu^{0.22}$$

with a 9.1% average deviation.

They then attempted to correlate two liquid phase, power data using the viscosity of either phase and an arithmetic average density but were unsuccessful. However, by calculating Ø and Re based on an arithmetic average density and a geometric mean viscosity they were able to obtain satisfactory results.

$$\mu_{average} = \mu_X^{x} \cdot \mu_Y^{y}$$

where x and y are volume fractions.

On this basis they were able to correlate the power data for two phase systems by one line on a log Ø vs. log Re plot with one exception. This exception was that at values of Re = 10^5 and higher, different power consumptions were obtained depending on which direction the point was approached from, for certain oil-water concentrations. This the authors interpreted as being due to an emulsion formation at these concentrations above impeller speeds corresponding to Re = 10^5 with a consequent increase in fluid viscosity.

The authors report the power consumed by seven different impellers operated in the same tank at the same location and with the same liquid height. Plots of Ø vs. Re for these seven impellers shows practically parallel lines for each impeller. The authors therefore calculated a "shape factor" which is independent of Reynolds Number for a considerable range (the range is not specified) which relates the power consumed by one impeller to that of another. For example, at $H/D = 1.33$ a four-bladed flat paddle (four arms out from the shaft) will require 1.22 times the power of a two-bladed paddle at the same Reynolds Number.

The authors then report data on power variation for a given impeller with liquid depth. The data obtained showed that the power consumption was proportional to the liquid depth to the 0.66 power. $(P = K(H)^{0.66})$ Power to a two-phase system will vary with depth in the same manner as long as conditions are such as to allow no emulsion viscosity effects.

Little power variation was found in impeller locations between $\frac{Y}{H} = .1$ to $\frac{Y}{H} = .6$ although there was a consistent drop in power input as the impeller was raised. Above a location equivalent to $\frac{Y}{H} = .6$ the power required was considerably less.

The remainder of this paper deals with agitation performance as determined by a sampling technique based on the Hixson-Tenney mixing index.

The authors draw the conclusion that maximum contacting performance was obtained above 200 foot pounds per minute per cubic foot power application by the impeller.

Ruston et al (1946) [27] reports a method for measuring the volumetric flow of water produced by a marine type propeller. Results are given for several propellers 4" to 12" in diameter and one 6" turbine.

Chaddock (1946) [10] reviews previous work in agitation. No new data is presented. 127 references are given.

Olney and Carlson (1947) [25] in an interesting paper, present data on an arrowhead turbine and on a spiral turbine with stator ring in one-phase and two-phase liquids. They then went back over the then existing literature and presented graphs for similar impellers operated under the same conditions. They compare in this manner the data of White and Brenner, Miller and Mann, and Hixson and Baum for paddles and also that of Hixson and Baum, and Miller and Mann and their own data, on turbines. Finally they present a nomograph for calculating HP . This was later included in the third edition of the Chemical Engineers Handbook and has been described above.

E. S. Bissel et al (1947) [8] discuss good practice in the use of fittings, coils, baffles, draft tubes, steady beams and other details of vessel, impeller and auxiliaries construction in agitated vessels. The following table is given for the relation of Power absorption to number and width of baffles. Percent power is based on four full length baffles each 8.3% of tank diameter in width as 100%. Turbine impeller operated at one turbine diameter off bottom.

TABLE V

Baffle Width vs Power Consumption

Baffle Width % Tank Diameter	% Power for one to six Baffles					
	1	2	3	4	5	6
2	30	52	63	72	76	78
5.5	40	64	78	87	92	94
8.3	50	78	92	100	102	104
10.0	58	82	95	103	105	106

Mack and Kroll (1948) [20] reported in some detail the effect of various baffle conditions on power consumption using a flat paddle impeller and measuring power with a dynamometer. They found that in all cases a condition which they called, "fully baffled" could be obtained. A tank may be considered fully baffled when an increase in baffle size does not appreciably increase the power which the impeller will draw at a given speed. They concluded that with any <u>impeller</u> 1/4 to 1/2 of the tank diameter in length and with 3 to 4 baffles 1/10 to 1/12 of the tank diameter in width, fully baffled conditions would be obtained. Further that in the fully baffled condition the equation for power drawn could be reduced to $Pg_c = KN^3L^5\rho$

E. J. Lyons (1948) [19] discusses the flow patterns of the 6 types of commonly used impellers (paddles, propellers, turbines, radial propeller, and discs). No horsepower correlations are given. The following is quoted from the paragraph on discs:

> "Commercial varieties are characterized by high shear and attrition in a limited batch volume for such services as viscous dissolving, emulsions, circulation and disintegration of low density fibrous solids."

Hooker (1948)[18] presented a paper which again reviewed the past data by plotting the Power Function Ø against Reynolds Number. Then in order to simplify agitator selection and design, Hooker describes the flow pattern obtained with different impellers and tank conditions. He then replots the data in general as Power Number (Po) vs. Re and provides two additional graphs for taking into account various geometrical dissimilarities.

Serner (1949)[30] discusses disc agitators. He states that they are good for agitating viscous liquids or solids bearing material but gives no power correlations.

O'Connell and Mack (1950)[24] reported data on 2, 4, and 6 bladed flat turbines (paddles) in fully baffled tanks. Power measurements were made by dynamometer. They plotted their data and determined the necessary exponents and constants in a manner similar to White and Brenner. In the turbulent region they obtained the general equation:

$$Pg_c = KN^3L^5\rho$$

with the following value of the constants

No. Blades	K	b
2	13.8	1.23
4	19.4	1.15
6	23.7	1.09

An equation for the viscous flow region was also given.

Rushton, Costich and Everett [28] in two consecutive articles (1950) present considerable data on the power characteristics of mixing impellers including propellers and many types of turbines. Power measurements were made by dynamometer. They give a dimensional analysis derivation similar to that given in Section II of this paper. They present their data in the form of Po vs. Re plots (not equations).

In the viscous flow region (at $Re < 10$), they found the exponent 'e' of equation (8c) to be equal to -1. This equation then reduces to: $P g_c = K \mu N^2 D^3$

In the turbulent flow range (at $Re > 10^4$) $e = 0$ for most impellers. The power consumption is then independent of viscosity in this range.

The authors present values of the Froude number exponents (for use in unbaffled tanks).

A considerable amount of valuable additional information is given in this article which can not be dicussed here.

Quillen [26] in a general review of mixing (1954) gives illustrations of disc agitators made by the Cowles Co. and the H. E. Serner Co. He claims that the disc is unique in providing 100% radial flow with a low degree of shear. He claims that discs find applications in mixing thin pastes and slurries. No power information is offered.

Ryder [29] (M.S.Thesis, N.C.E. - 1952) presents some data on power consumption of simple paddles. He did not take into account the difference between motor losses at no load and at operating load.

IV Selection and Description of Equipment

An 18" outside diameter by approximately 1/4" wall by 21" high glass vessel with an essentially flat bottom was obtained which permitted observation of the type of agitation resulting throughout the experiment. The bottom of the glass jar was convex upward with a rise of about 1/4" from outside to center.

The choice of impellers was the critical decision. The impellers were to be run at an average speed of 1800 RPM. This is 4 to 8 times the speed of normal impellers. In order to keep the power consumption within reasonable limits the diameter could be reduced (P is proportional to L^5). Very small impellers however, would produce high local shear but little movement throughout the tank. The work of O'Connell & Mack [24] and others shows that power consumption is almost directly proportional to blade width. Since most conventional impellers have a W/L ratio of .2 to .8, it was decided to use discs where $W/L < 0.1$.

For the 18" diameter tank 3" to 6" discs were considered. Equation (8c) $HP = \frac{Po\, L^5 N^3 \rho}{550\, g_c}$ was used to predict the maximum horsepower of the impellers to be used.

From the work of Cooper, Fernstrom and Miller [11] a constant power number, $Po = 3.0$ was obtained for the range of Reynolds Numbers 10^3 to 10^6. The horsepower consumption of

3", 4" and 6" discs was then estimated.

Assuming operation in water Equation (8c) then becomes

$$HP = \frac{30(L^5N^3)(62.4)}{550 \times 32.2}$$

$$= 0.0106\,L^5N^3$$

$$Re = \frac{L^2N\rho}{\mu} = \frac{62.4}{.000672} \times L^2N$$

$$= 9.29 \times 10^4 L^2N$$

<u>TABLE XVI</u>

Anticipated Maximum HP Calculation

L in.	L ft.	N RPM	N RPS	N^3	L^5 $\times 10^{-3}$	(Re)	V ft/min	HP
3	.250	1800	30	27,000	1.02	174,000	1413	0.29
4	.333	1800	30	27,000	4.12	309,000	1883	1.18
4	.333	1200	20	8,000	4.12	206,000	1255	0.35
5	.416	1800	30	27,000	12.5	483,000	2352	3.38
6	.500	900	15	3,350	31.25	305,000	1413	1.11
6	.500	1800	30	27,000	31.25	700,000	2826	5.87

A one-horsepower motor was available and it was decided to limit the impeller sizes to 3" and 4" for shapes approaching that of the one reported by Cooper et al and to use larger impellers with caution. Three different styles were tried. These are illustrated by drawings. See Figures IV, V, and VI. Figure IV shows a simple flat disc. Fig. V shows a disc with teeth somewhat analogous to a circular saw blade. This disc was used because of ease of manufacture. The third type of disc shown in Fig. VI is a vaned disc turbine somewhat similar to that used by Cooper et al., but with a ratio of $\frac{w}{L}$ of only .085.

The motor used was an Allis Chalmers Model No. 51-669-943-46. The name plate data is as follows: Induction Motor, 1 HP, 3 Phase, 60 Cycle, 1730 RPM, 220-440 Volts (3.6-1.8 amps) Type GZZ, Frame 1320, 24 hours, 55°C rise.

The motor was mounted on an adjustable base so that the motor shaft center line to impeller shaft center line could be easily adjusted by turning a crank.

Attached to the motor shaft was an Ideal Variable speed pulley, Model No. 49-031, 7" Nominal. This pulley has an effective speed range of somewhat more than 2 to 1. The speed is changed merely by changing the motor to impeller shaft center line distance. With the variable speed pulley on the motor shaft, the impeller speed could be changed from about 800 RPM to about 1900 RPM. With the variable speed pulley on the impeller shaft, the impeller speed range was approximately 1600 to 3700 RPM.

The impeller shaft was one inch diameter drill rod steel. The bearing spacing was 8" and the overhung length of the shaft was 21".

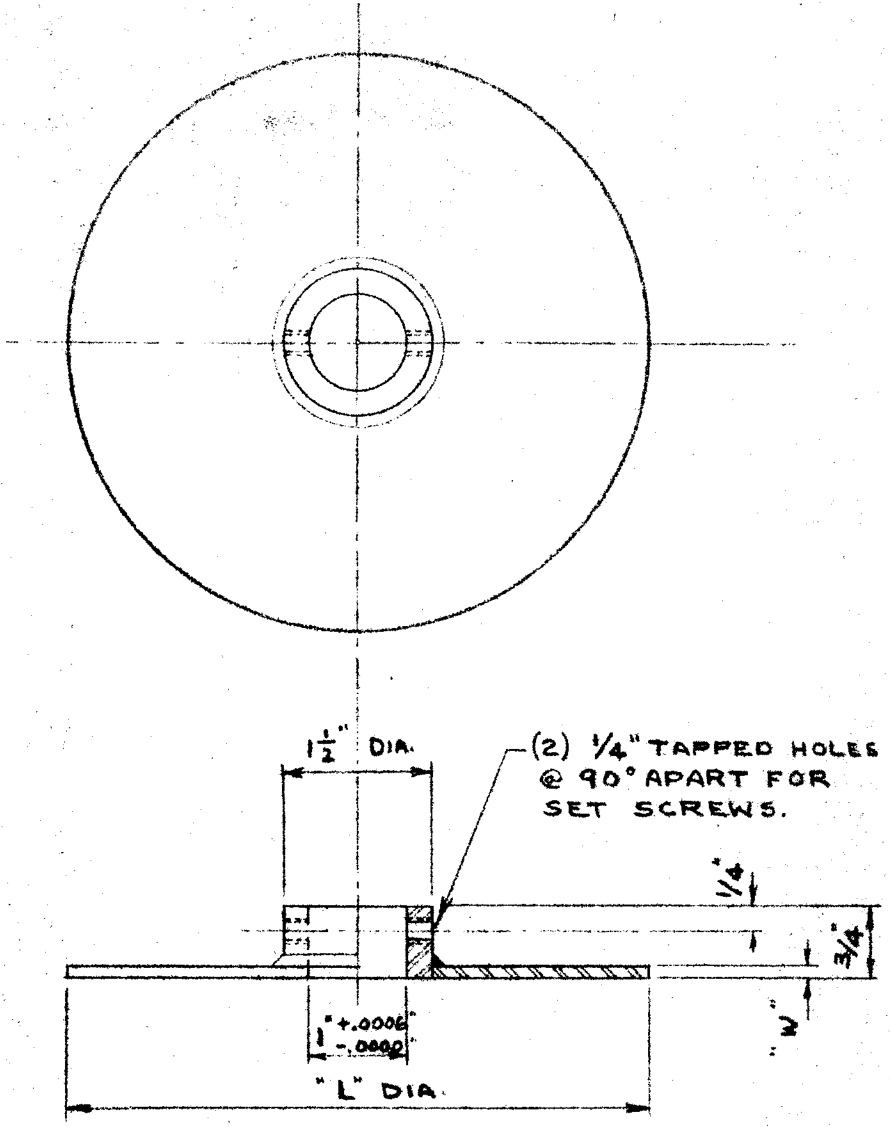

"L" DIA.	"W"	L/W
4"	.083"	48
5"	.104"	48
6"	.125"	48

FLAT DISC IMPELLER

FIG. IV

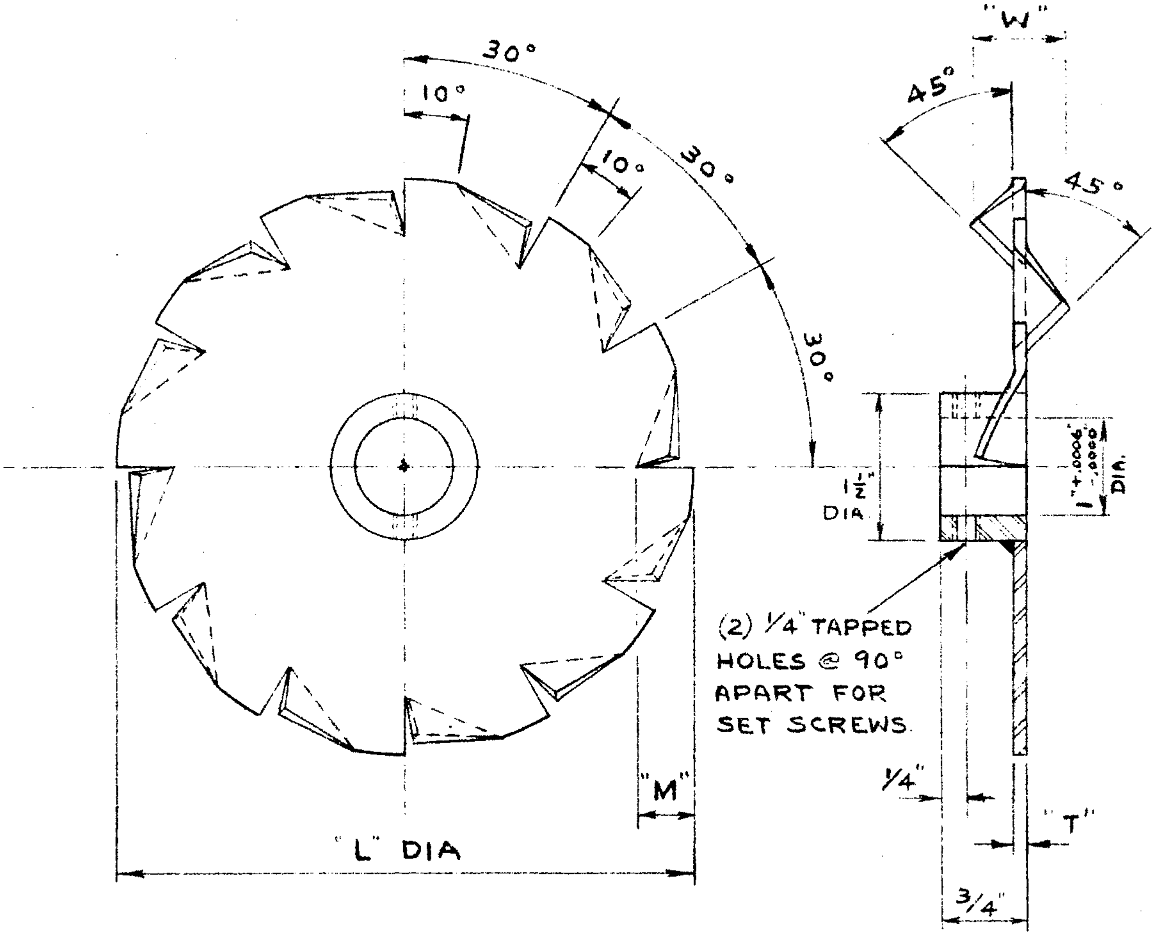

(2) 1/4" TAPPED HOLES @ 90° APART FOR SET SCREWS.

"L" DIA.	"M"	"T"	"W"
3"	.300"	.063"	.487"
4"	.400"	.083"	.647"

SCALE ½" = 1"

FIG. V
SAW TOOTH IMPELLER

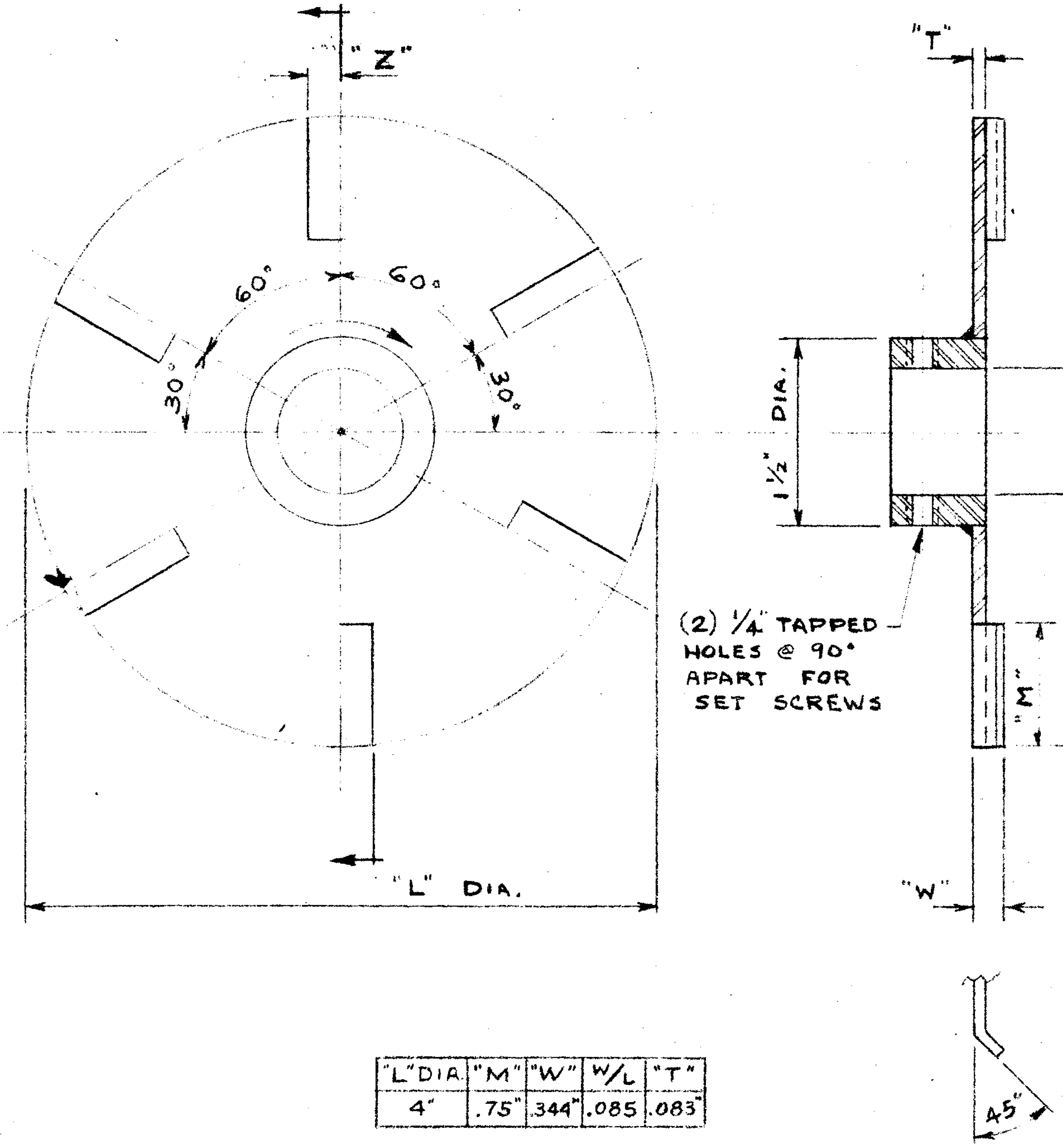

"L" DIA.	"M"	"W"	W/L	"T"
4"	.75"	.344"	.085	.083"

FIG. VI

SIX (6) BLADED TURBINE DISC

These items were assembled on an angle iron and plate steel frame as shown on the attached drawing, Fig. VII and may be seen in the attached photograph, Fig. VIII.

Four baffles each 2-5/8" wide (15% of 17-1/2" I.D.) by 1/4" thick were hung from the steel plate which supported the bearing assembly and projected down to within 1/8" of the tank bottom.

The glass tank was raised into place with the baffles installed and supported on a wood stand. The tank was centered and then leveled with wedges using a straight edge across the top of the tank and a spirit level.

Power was measured with a General Electric Co. Model P-3, three-phase watt meter. The scale was divided into 5 watt intervals. The reading could be estimated to within one watt ± 1/2 watt. The scale had a correction factor of 2.0, so it was necessary to multiply all readings by 2.

The temperature of the liquid was measured by a glass thermometer with a division of one degree Fahrenheit.

In addition to the above equipment, a prony brake and platform scale were used in calibrating the motor. These are described in the next section.

Shaft speed was measured by a Starrett Co. tachometer with 100 divisions per tachometer revolution. The tachometer was placed into center holes on the appropriate shaft.

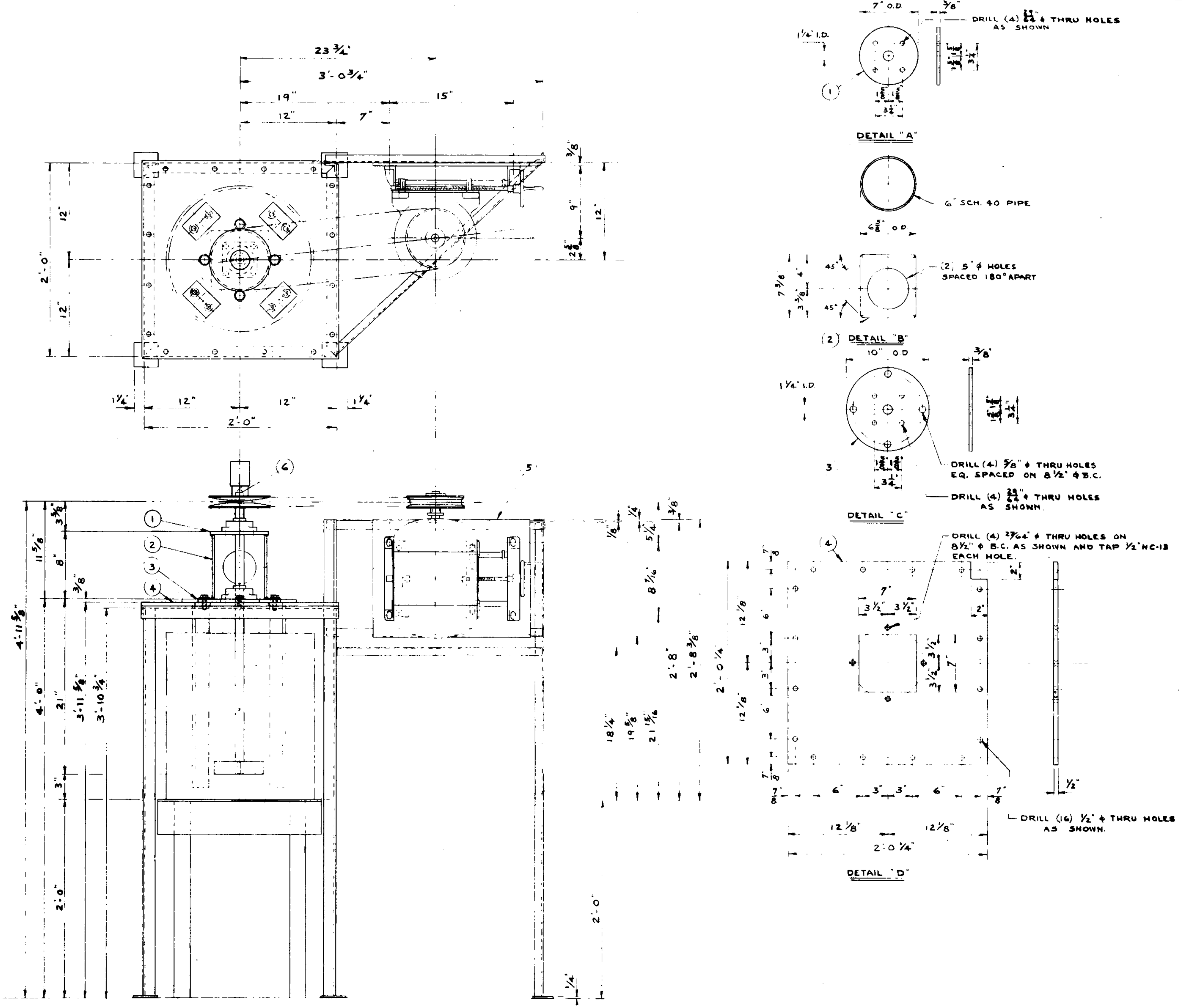
23 3/4"
3'-0 3/4"
19"
15"
12"
7"
3/8"
9"
12"
2 5/8"
2'-0"
12"
1 1/4"
12"
12"
1 1/4"
2'-0"
(6)
5
(1)
(2)
(3)
(4)
3/8"
11 5/8"
8"
3/8"
4'-11 5/8"
4'-0"
21"
3'-11 5/8"
3'-10 3/4"
3"
2'-0"
1/8"
1/4"
5 1/4"
3/8"
8 7/16"
2'-8"
2'-8 3/8"
2'-0 1/4"
18 1/4
19 5/8
21 15/16
2'-0"
1/4"
7" O.D
3/8"
DRILL (4) 29/64" ϕ THRU HOLES AS SHOWN
1 1/4" I.D.
1
3 1/4
DETAIL "A"
6" SCH. 40 PIPE
6 5/8" O.D
45°
7 3/8
4"
3 3/8
(2) 5" ϕ HOLES SPACED 180° APART
(2)
DETAIL "B"
10" O.D
3/8"
1 1/4" I.D
3
3 1/4
DRILL (4) 5/8" ϕ THRU HOLES EQ. SPACED ON 8 1/2" ϕ B.C.
DRILL (4) 29/64" ϕ THRU HOLES AS SHOWN.
DETAIL "C"
(4)
DRILL (4) 29/64" ϕ THRU HOLES ON 8 1/2" ϕ B.C. AS SHOWN AND TAP 1/2" NC-13 EACH HOLE.
7"
3 1/2"
3 1/2"
2"
2"
7/8
12 1/8
6"
3"
3"
6"
3 1/2
3 1/2
7"
1/2"
7/8
6"
3"
3"
6"
7/8
DRILL (16) 1/2" ϕ THRU HOLES AS SHOWN.
12 1/8"
12 1/8"
2'-0 1/4"
DETAIL "D"

FIG. VII

FIG VII
Equipment
Assembly
Photographs

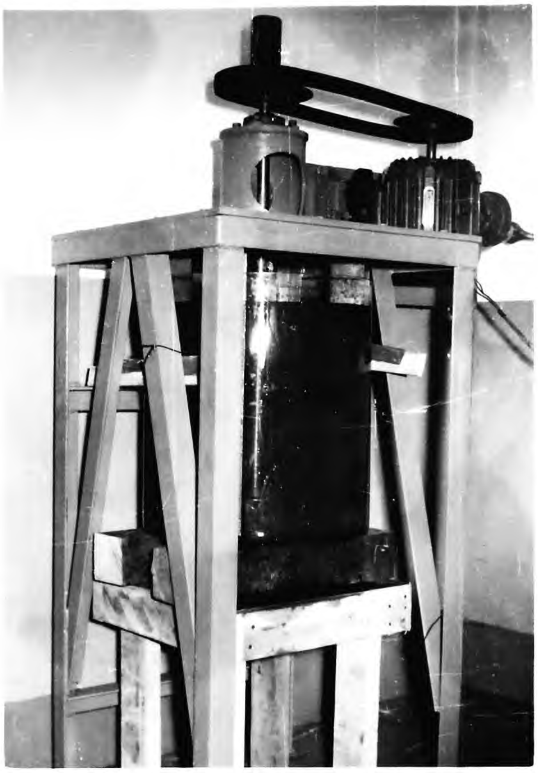

V CALIBRATION OF MOTOR AND DETERMINATION OF FRICTION LOSSES

It was evident that in order to ascertain the power actually used by the impellers, the motor losses and friction losses would have to be determined. With the motor in place, a special flat pulley 4" in diameter by 3" long was placed on the motor shaft. Several no load readings were taken. A prony brake was then mounted on the pulley. The details of this brake are shown on an attached drawing. See Figures IX and X. The brake consisted of two blocks of wood fitted around the 4" pulley with a lever arm extending ten inches out from the motor shaft centerline. By turning the wing nuts shown on Figure IX, the friction between the pulley and the wood blocks could be increased or decreased. The lever arm of the brake was attached by means of a flexible copper wire to a weight set on a platform scale. The platform scale was made by Fairbanks-Morse Co. The tare arm was graduated in one-ounce intervals. The scale had a range of 75 lbs. The weight used in the tests was 28 lbs., 12 ounces. For a diagram of the motor calibration test assembly, see Figure XI. The motor shaft rotated so that it tended to lift the weight on the scale. The decrease in scale reading was then the force of the torque couple exerted by the motor on the brake.

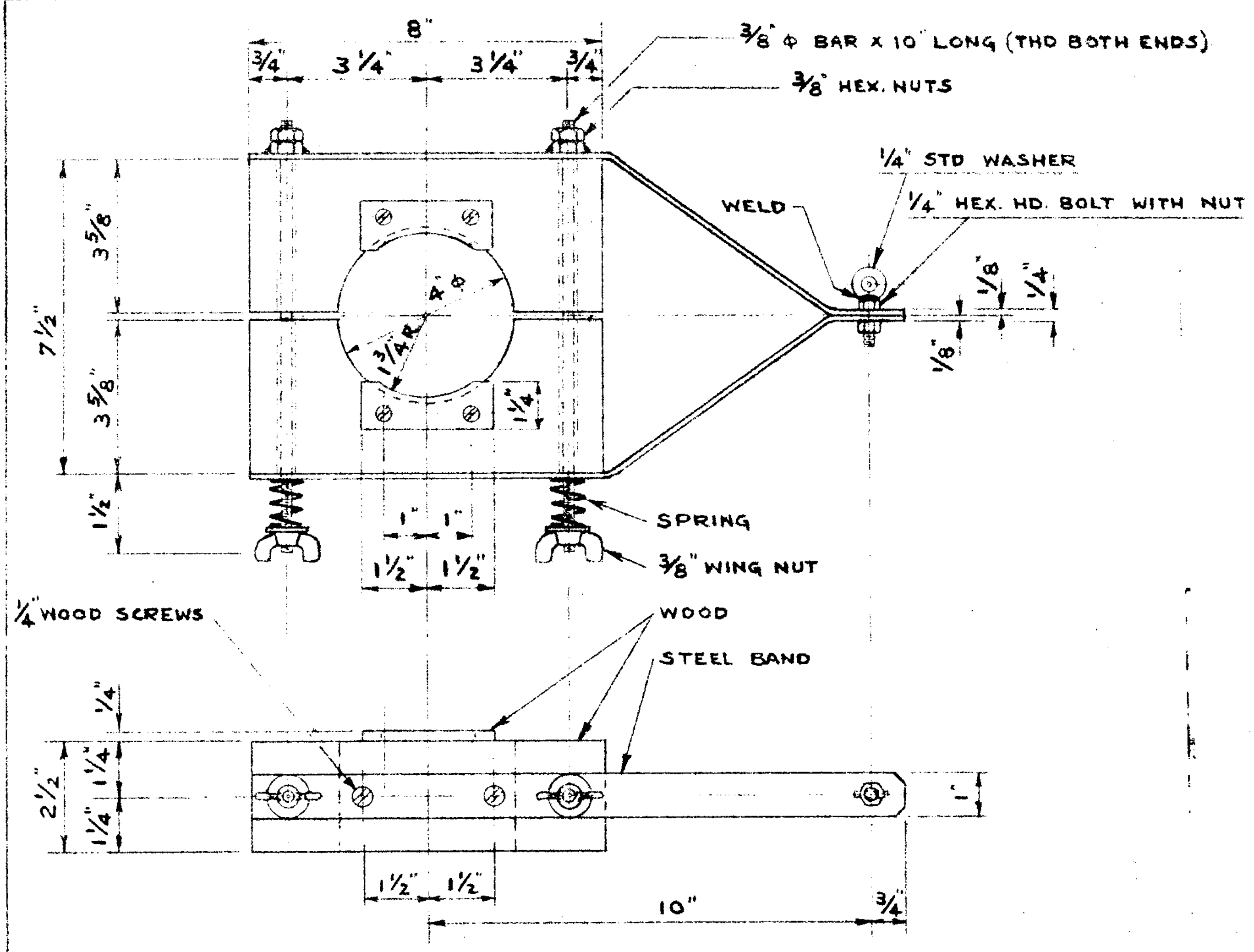

PRONY BRAKE

FIG. IX

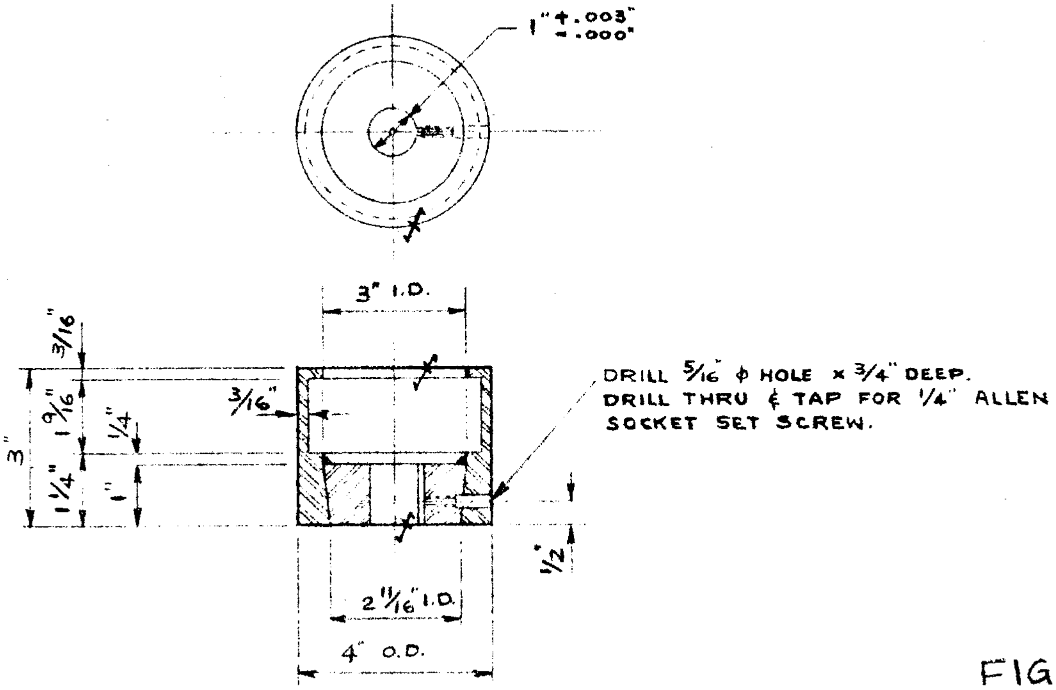

PULLEY

FIG. X

SCALE - 3" = 1'-0"

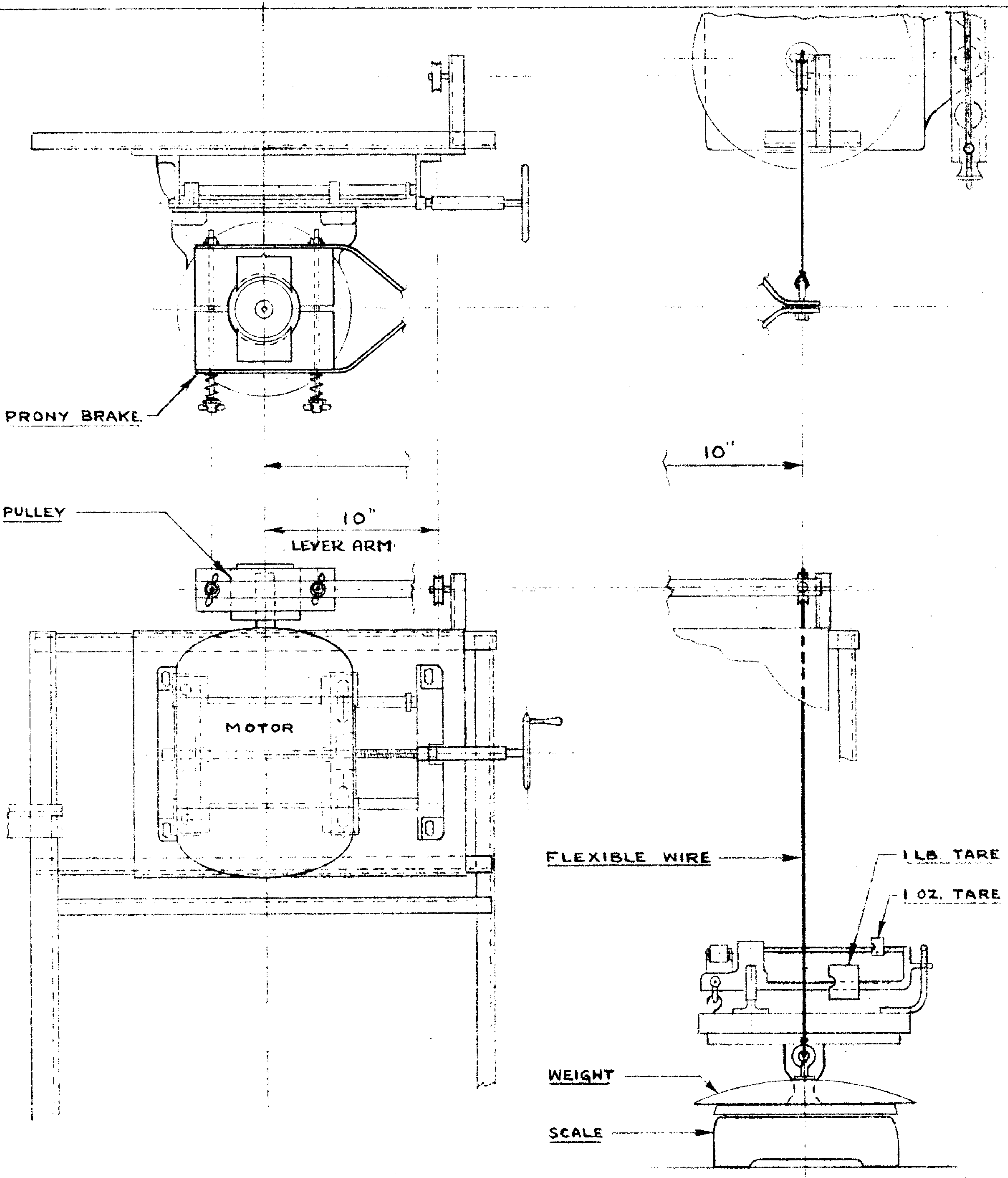

FIG. XI

PRONY BRAKE TEST
ASSEMBLY

4-19-55
SCALE - 1½" = 1'-0"

The keyway of the four inch pulley after being placed on the motor shaft was sealed with pipe dope and with the motor running, water was added into the hollow top of this pulley. This kept the wood blocks of the prony brake cool enough so they did not burn. Readings were taken during the calibration runs only when the pulley was steaming, indicating that a constant temperature had been reached.

With the equipment assembled as described above and shown in Figure XI, several runs were made to calibrate the motor. Readings were taken of watts, shaft speed (RPM) and platform scale reading.

The horsepower measured by a Prony Brake is given by the formula

$$HP = \frac{FA \times 2\pi \times N}{33\,000}$$

where: F force (lbs) - decrease of platform scale reading

A lever arm length - 10" or 0.833 ft.

N shaft speed - - - - RPM

hence: $HP = 0.000159FN$

for this installation.

The mechanical horsepower calculated by this equation, divided by 746, gives watt output. This, -- divided by watts input, is the efficiency. The data and the calculated values were given in the Appendix. A plot of watts input vs watts output, is shown on Figure XII. This curve can be used to determine motor losses.

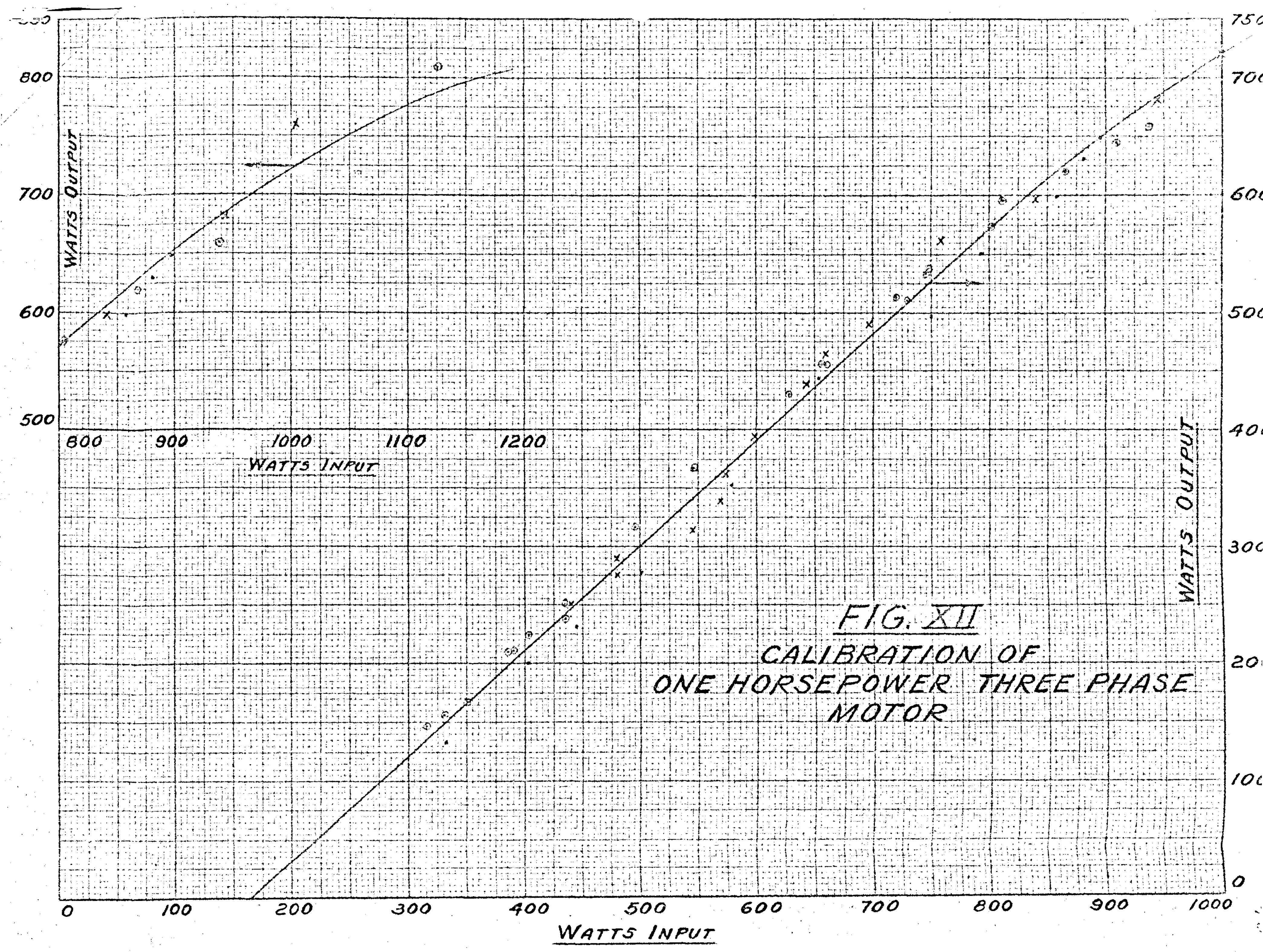

FIG. XII
CALIBRATION OF
ONE HORSEPOWER THREE PHASE
MOTOR

The prony brake pulley was then removed from, and the variable speed pulley placed on, the motor shaft. This was connected by the belt to the impeller shaft and a set of runs made from approximately 800 to 1900 rpm with no impeller on the shaft and the shaft running in air. Watts input and speed readings were taken. The position of the pulleys was then reversed and readings taken from about 1700 to 3700 rpm. With the watts input thus recorded, the watts output from the motor was determined from Figure XII. This was taken as the losses due to friction and windage. There is one possible fallacious assumption in this procedure, namely that the friction and windage losses are a function of RPM instead of load. However, as the belt and pulley used are capable of transmitting three times the load actually applied, the procedure used would result in a negligible error. A plot of this loss in watts vs impeller shaft speed, is given in Figures XIII and XIV.

VI TEST PROCEDURE

The test procedure was relatively simple after the equipment was assembled. An impeller was placed on the shaft. The glass tank was then positioned and filled with 17-1/2" of water so that $\frac{H}{D} = 1.0$. The impeller was then run at various speeds and readings taken of watts and impeller speed. The temperature of the water was also checked.

The motor output watts was read from Figure XI. From this was subtracted the windage and friction losses for the corresponding impeller shaft speed from Figure XII, or XIII, the result being the horsepower consumed by the impeller.

In order to aid the visual observance of fluid flow and degree of agitation in the tank, several different materials were tried. The final materials used were a dozen pieces of white vinyl plastic 600 volt insulation, 1" long stripped off of #14 copper wire, as a cylinder, and a dozen pieces of black rubber covered lamp cord with two multiple strand conductors also cut into 1" lengths. These were designated W.I. and B.I. for white insulation and for black insulation, respectively, although the black pieces contained copper as well as insulation. The height to which the white and black pieces were lifted, was recorded periodically.

FIG. XIII

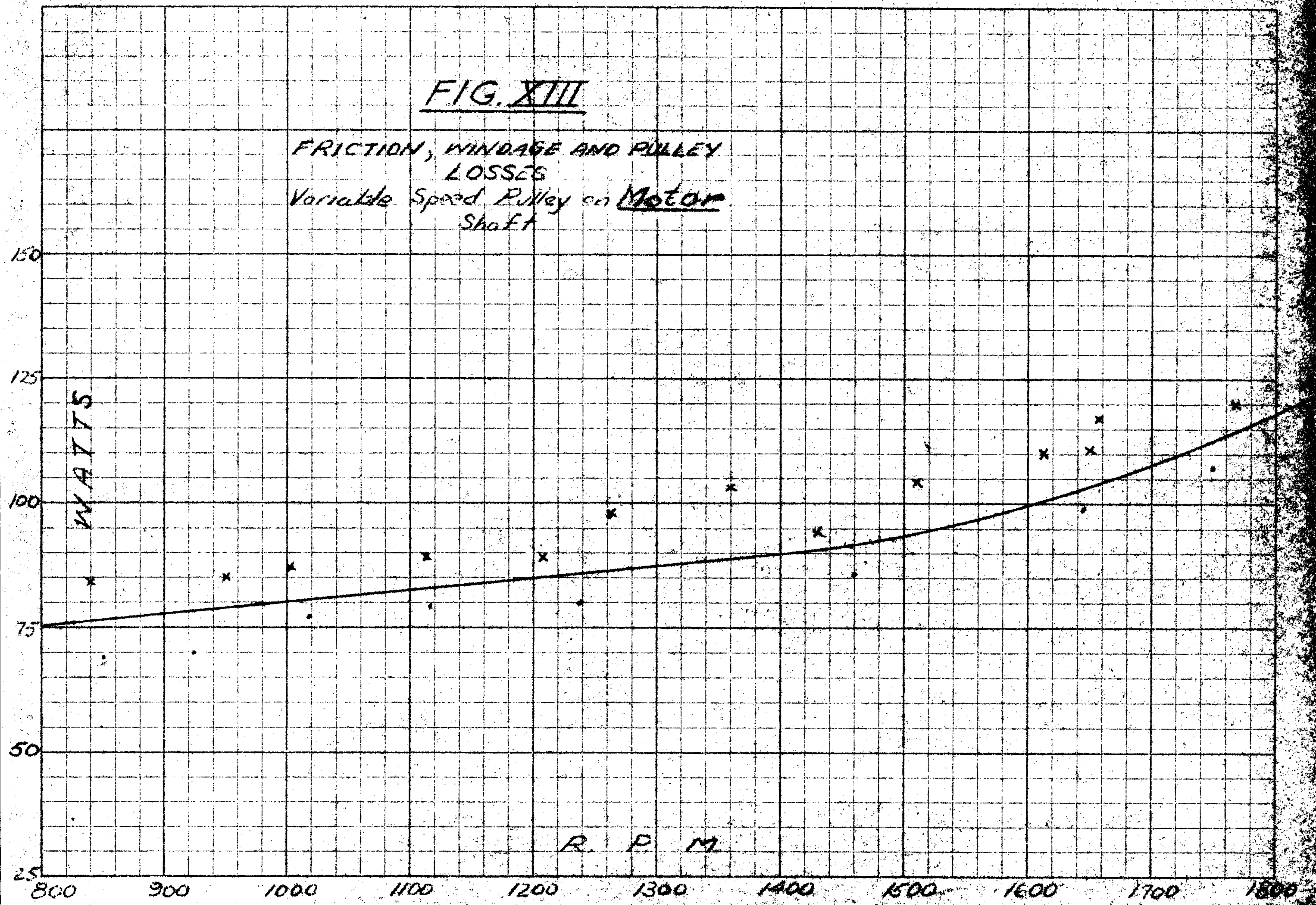

FRICTION, WINDAGE AND PULLEY LOSSES
Variable Speed Pulley on **Motor** Shaft

FIG. XIV

FRICTION, WINDAGE AND PULLEY LOSSES

Variable Speed Pulley on Impeller Shaft

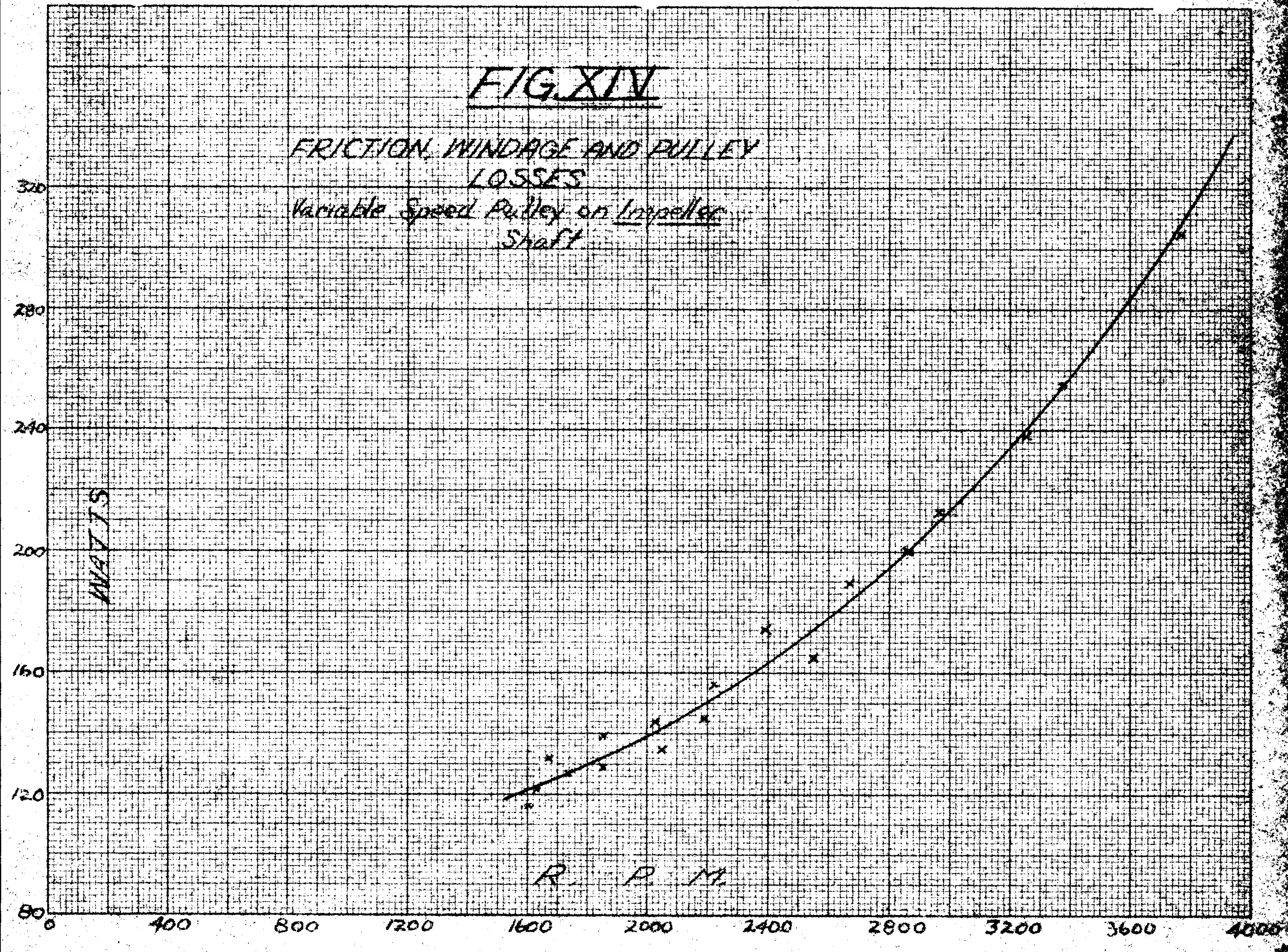

VII RESULTS

1. Experimental Runs

Eight runs were made altogether, over the range of speeds available with the pulleys described. Six different impellers were operated in water. These were a 4", 5", and 6" flat disc; a 3" and 4" saw-tooth disc; and a 4" six-bladed turbine. In addition, the six-bladed turbine was operated in a 20% and a 40% sugar solution in order to extend the Reynolds Number range. The original data is given for these eight runs in the Appendix. The data is condensed in Tables X to XVII, inclusive.

2. Calculations

Tables X to XVII are calculation sheets for each run. The average values of the observed data for each run are given, as well as the height to which the indication pieces of insulation were lifted. These columns are followed by watts output from the motor (from Figure XII) then by the friction losses (from Figure XIII or XIV). The difference between motor output and friction losses gives the next column, which is impeller power in watts. This is then converted to horsepower by dividing by 746. The Reynolds Number and Power Number were then calculated. A sample calculation may be found on page 113in the Appendix. A column of values for N^3 is given to facilitate checking of the calculations.

3. Horsepower vs impeller speed correlation

A plot was made of log HP vs log N for each of the eight runs. These are shown in Figures XV to XX inclusive. The range of horsepower measurements was from $\frac{1}{100}$ to almost 1.0. Power points below $\frac{3}{100}$ HP while plotted were not considered in drawing the curves. Above $\frac{3}{100}$ HP the correlation is very good and results in an obvious straight line in all cases. The slopes of these lines are as follows:

Table VII

Slope of log HP vs log rpm curves

Fig.No.	Impeller	Slope
XV	4" flat disc in water	2.475
	5" " " " "	2.430
	6" " " " "	2.470
XVI	3" saw tooth " "	3.04
XVII	4" " " " "	3.16
XVIII	4" turbine " "	2.65
XIX	4" " in 20% Sucrose	2.97
XX	4" " " 40% "	3.08

4. Power Number vs Reynolds Number Correlation

The Power Number vs the Reynolds Number was plotted for each set of runs. These are shown in Figures XXI to XXVI inclusive. Figure XXI shows the results for the 4" six-bladed turbine in water, 20% and 40% sugar solution over a range of Reynolds Numbers from 25,000 to 440,000. The points fall along a straight horizontal line at an average value of Po = 0.9. Neglecting the five highest points which are at the lowest observed speed (about 780 RPM) and subject to the greatest error, the average deviation is .060 or 6.7% for the other 61 points. The Power Number in this case can then be assumed to be a constant over the range of Reynolds Numbers observed.

For the other impellers the Power Number vs Reynolds Number plot produced in general, a graph where the value of Po increased with decreased Reynolds Number below a given value of Re. The points above this value of Re fell in a cluster similar to that for the six-bladed turbine. An examination of the data sheets shows that in each case the rise in Power Number starts at impeller horsepowers of 0.02 to 0.04 or occurs in the region of poorest accuracy of measurement. Consequently these points were disregarded and the Power Number taken as the average of the clustered points. The results are as follows:

TABLE VIII

Power Number of Impeller at High Reynolds Numbers

Impeller	Power Number
4" Flat Disc	0.055
5" " "	0.045
6" " "	0.035
3" Sawtooth Disc	0.037
4" " "	0.340
4" Six-bladed Turbine	0.900

5. Quality of Agitation

No quantitative deduction can be made from the observations on type of flow and agitation occurring. Certain qualitative results can be reported. All the impellers were located low in the vessel (about 2-1/2" off bottom, Y/H 2.5/17.5 0.14). Because of this the agitators were not effective in mixing the material near the top of the vessel at low speeds. At higher speeds all the agitators produced fairly violent agitation throughout. As a means of comparing the type of agitation obtained, the following table is given:

TABLE IX

Comparison of Effectiveness of Impellers
(W.I. white insulation; B.I. black insulation)

Impeller	Liquid	WI lifted 9"		BI lifted 9"	
		RPM	Peripheral Speed Ft/Min	RPM	Peripheral Speed Ft/Min
Flat Discs					
4"	water	2180	2280	3700	3880
5"	water	1800	2360	2800	3670
6"	water	1450	2290	2500	3950
Saw-Tooth					
3"	water	1800	1410	3350	2600
4"	water	1250	1310	1700	1780
Turbine					
4"	water	1200	1260	1600	1680
4"	20% sucrose	1100	1150	1450	1520
4"	40% sucrose	1000	1050	1250	1310

The motion of the one-inch pieces of insulation in all cases was out radially from the impeller toward the wall of the vessel, up the vessel wall, then in toward the shaft and down with a progression in the direction of impeller rotation.

No appreciable vortexing occurred at the shaft at any time, the maximum being 1/2" to 3/4" at 3600 rpm. During the most violent agitation a liquid head of from 1/8 to 3/8 of an inch would build up on one side of the baffles relative to the other side.

One other point concerning the quality of agitation may be noted. To make the 20% sugar solution about 33 lbs. of sugar were added to the water. The 4" turbine was run one minute at 1800 rpm and stopped. A clear solution resulted as soon as the air bubbles rose out of the liquid. To make the 40% sugar solution, about 46 lbs. of sugar were added to the 20% solution. The agitator again ran for one minute and stopped, with the same result -- a clear solution.

TABLE X

DATA and CALCULATED VALUES

FOR

4" FLAT-DISC IN WATER

Run No.	Watts Input	RPM	White Insulation Lifted	Black Insulation Lifted	Motor Output Watts	Losses Watts	Impeller Power Watts	Impeller Horse-power	Reynolds Number (x10-3)	N^3 (x10-6)	Power Number
Variable Speed Pulley on Motor Shaft											
1	260	798	No movement		84	75	9	.0121	124	508	.354
2	260	864			84	76.5	7.5	.0100	135	641	.232
3	264	958			87	79	8	.0107	149	880	.182
4	268	1003			92	80	12	.0161	157	1020	.236
5	276	1138			99	83	16	.0214	177	1460	.219
6	276	1194			99	85	14	.0187	186	1700	.164
7	280	1302			102	87	15	.0201	203	2210	.136
8	286	1380			107	89	18	.0241	215	2620	.137
9	287	1478	Barely moves		108	92	16	.0214	230	3210	.100
10	295	1585			115	98	17	.0228	247	3990	.085
11	302	1659	3 to 5"		122	104	18	.0241	258	4530	.079
12	313	1804			132	118	14	.0187	281	5890	.048
13	314	1820	5 to 7"	1 to 2"	133	120	13	.0174	284	6000	.043
Variable Speed Pulley on Impeller Shaft											
14	315	1631			134	123	11	.0147	254	4350	.050
15	325	1772			142	129	13	.0174	276	5530	.046
16	345	1926			160	136	24	.0321	300	7150	.067
17	374	2181	8 to 10"		186	149	37	.0495	340	10400	.071
18	411	2463	12 to 13"	6"	220	168	52	.0696	384	15000	.070
19	467	2857			270	200	70	.0937	445	23200	.060
20	582	3430			373	265	108	.145	535	40300	.054
21	566	3370			360	254	104	.139	525	38200	.054
22	640	3816	15"	9 to 10"	426	315	111	.149	595	55500	.040
23	632	3766			419	308	111	.149	587	53500	.042

Water Temperature = 60°F

TABLE XI

DATA and CALCULATED VALUES

for

5" FLAT DISC IN WATER

Run No.	Watts Input	RPM	White Insulation Lifted	Black Insulation Lifted	Motor Output Watts	Losses Watts	Impeller Power Watts	Impeller Horse-power	Reynolds Number $(x10^{-3})$	N^3 $(x10^{-6})$	Power Number
Variable Speed Pulley on Motor Shaft											
24	280	808			102	75.5	26.5	.0355	197	527	.330
25	280	917			102	78	24	.0322	223	770	.205
26	284	986			106	80	26	.0348	240	959	.178
27	288	1164			110	84	26	.0348	283	1580	.108
28	304	1228			124	85.5	38.5	.0516	299	1850	.137
29	306	1400			125	90	35	.0469	341	2740	.0838
30	318	1434			137	91	46	.0616	349	2950	.1024
31	342	1637			157	102.5	54.5	.0730	399	4370	.0818
32	340	1652			156	103	53	.0710	403	4510	.0771
33	370	1835			183	122	61	.0817	447	6180	.0648
Variable Speed Pulley on Impeller Shaft											
34	340	1680			156	125	31	.0415	409	4740	.0430
35	363	1830			176	131	45	.0603	446	6120	.0482
36	383	1916			195	135	60	.0805	467	7020	.0561
37	418	2115			227	146	81	.1085	515	9450	.0566
38	467	2445			270	166	104	.1392	596	10460	.0655
39	534	2714			330	187	143	.1917	662	20000	.0470
40	640	3109			425	225	200	.268	759	30000	.0438
41	865	3758			622	306	316	.423	916	53000	.0391
42	784	3534			557	275	282	.378	862	44000	.0421
43	684	3252			466	240	226	.303	792	34300	.0433
44	556	2856			350	200	150	.201	696	23300	.0423
45	486	2486			287	169	118	.158	606	15350	.0504
46	440	2290			245	156	89	.119	559	12000	.0486
47	434	2276			240	155	85	.114	555	11790	.0474
48	394	2010			205	140	65	.0870	490	8120	.0525
49	372	1812			185	130	55	.0736	441	5940	.0608

Water Temperature = 59°F

TABLE XII

DATA and CALCULATED

VALUES for 6" FLAT

DISC IN WATER

Run No.	Watts Input	RPM	White Insulation Lifted	Black Insulation Lifted	Motor Output Watts	Losses Watts	Impeller Power Watts	Impeller Horse-power	Reynolds Number (x10-3)	N3 (x10-6)	Power Number
Variable Speed Pulley on Motor Shaft											
50	378	1683	10 to 11"	Tumbled	191	106	85	.114	651	4790	.0468
51	346	1550			162	97	65	.0870	599	3710	.0462
52	330	1450	8"-9"	No motion	147	92	55	.0736	560	3050	.0478
53	316	1282			135	87	48	.0643	495	2110	.0600
54	300	1145	5"-6"		120	84	36	.0482	442	1500	.0632
55	284	990			106	80	26	.0348	382	965	.0710
56	260	807	Tumbled		102	75	27	.0362	312	525	.1365
57	288	1020			110	81	29	.0388	394	1060	.0702
58	304	1222			124	86	38	.0509	472	1830	.0543
59	325	1450			143	92	51	.0683	560	3050	.0441
60	368	1665			181	105	76	.102	644	4600	.0437
61	399	1846			209	123	86	.115	713	6230	.0360
Variable Speed Pulley on Impeller Shaft											
62	388	1710	10"	1/2"	199	126	73	.099	660	5000	.0390
63	428	1900			235	134	101	.135	734	6810	.0390
64	432	1944	11-12"	1½ to 2"	237	137	100	.134	751	7350	.0360
65	470	2105			272	145	127	.170	813	9350	.0358
66	538	2393			334	163	171	.229	925	13700	.0330
67	641	2665	12"	7"	426	183	243	.326	1060	19000	.0338
68	802	3000	13"	10"	572	214	358	.480	1160	27000	.0350
69	1090	3498			765	270	495	.664	1350	42800	.0306
70	1084	3406	14-15"	14-15"	763	258	505	.676	1315	39500	.0338
71	1082	3360			762	252	510	.684	1300	38000	.0354
72	1225	3636			814	288	526	.705	1400	48000	.0290
73	704	2819			484	196	288	.336	1090	22400	.0340
74	536	2350			332	160	172	.230	908	13000	.0349
75	428	1974			235	138	97	.130	763	7650	.0335
76	366	1687			130	125	55	.0736	651	4800	.0302

Water Temperature = 70°F.

TABLE XIII

DATA and CALCULATED

VALUES for 3" SAW TOOTH

DISC IN WATER

Run No.	Watts Input	RPM	White Insulation Lifted	Black Insulation Lifted	Motor Output Watts	Losses Watts	Impeller Power Watts	Impeller Horse-power	Reynolds Number ($x10^{-3}$)	N^3 ($x10^{-6}$)	Power Number
Variable Speed Pulley on Motor Shaft											
77	328	1807	9"	No motion	145	119	26	.0349	149	5900	.372
78	316	1678			134	106	28	.0376	138	4700	.370
79	300	1510	8"		120	94	26	.0348	124	3430	.639
80	290	1361			111	89	22	.0295	112	2530	.735
81	280	1204	6"		102	85	17	.0228	99.5	1750	.820
82	276	1062	2 to 3"		99	77	22	.0295	87.6	1200	1.55
83	268	908			91	73	18	.0241	74.3	750	2.02
84	270	905	No motion		93	73	20	.0268	74.6	740	2.28
85	278	1072			100	82	18	.0241	88.5	1230	1.24
86	280	1227			101	86	15	.0201	101	1840	.688
87	294	1372			114	89	25	.0335	113	2590	.815
88	300	1513			120	94	26	.0348	125	3400	.645
89	306	1578			125	98	27	.0366	130	3910	.590
Variable Speed Pulley on Impeller Shaft											
90	326	1711	8½"	Jiggling	143	126	17	.0228	141	5000	.288
91	346	1844			162	132	30	.0402	152	6250	.405
92	362	2035	9½"	Tumbled	175	141	34	.0456	168	8400	.342
93	398	2274			208	155	53	.0710	185	11700	.381
94	442	2572	12 to 14"	2 to 3"	246	176	70	.0938	212	17000	.348
95	518	2884			315	203	112	.150	238	24000	.394
96	630	3333	12 to 16"	9"	417	249	168	.225	279	37000	.384
97	760	3647	12 to 16"	12 to 16"	535	290	245	.328	301	48500	.426
98	536	3046			331	218	113	.1515	251	28300	.338
99	442	2580			246	177	69	.0925	210	17100	.341
100	460	2646			362	182	31	.1035	218	18500	.370
101	396	2288			206	156	50	.0670	189	12000	.352
102	416	2368			224	161	63	.0845	195	13250	.401
103	360	2106			174	145	29	.0388	174	9350	.264
104	333	1981			155	134	21	.0281	155	6650	.266

Water Temperature = 57°F.

TABLE XIV

DATA and CALCULATED VALUES FOR 4" SAWTOOTH DISC IN WATER

Run No.	Watts Input	RPM	White Insulation Lifted	Black Insulation Lifted	Motor Ouput Watts	Losses Watts	Impeller Power Watts	Impeller Horse-power	Reynolds Number ($x10^{-3}$)	N^3 ($x10^{-6}$)	Power Number
Variable Speed Pulley on Motor Shaft											
105	393	1830			203	122	81	.109[illegible]	262	6130	.265
106	371	1681	10"	8"	184	106	78	.105[illegible]	240	4750	.329
107	340	1552			155	97	58	.077[illegible]	222	3750	.309
108	328	1387			145	89	56	.0750	198	2650	.422
109	322	1377		2"	140	89	51	.0684	197	2600	.392
110	308	1263	9"	tumbled	128	86	42	.0564	181	2040	.412
111	286	1137			107	86	21	.0282	162	1460	.288
112	272	1009			94	80	14	.0187	144	1020	.273
113	262	878	6 to 7"	No motion	87	77	10	.0134	125	680	.294
114	258	813			82	75	7	.0094	106	540	.294
115	264	932			88	78	10	.0134	133	810	.250
116	282	1096			104	82	22	.0295	157	1310	.335
117	336	1462			152	92	60	.0305	209	3120	.384
118	356	1573			170	98	72	.0965	225	3900	.369
119	392	1696			201	108	93	.125	242	4860	.382
Variable Speed Pulley on Impeller Shaft											
120	954	2917	Water	Opaque	680	205	475	.636	416	24600	.336
121	1180	3100			800	224	576	.784	444	29700	.393
122	410	1761	12-14"		219	128	91	.122	252	5420	.336
123	437	1864			243	133	110	.143	266	6450	.342
124	480	2013			281	140	141	.139	288	8150	.346
125	407	1724	12"	8"	217	126	91	.122	246	5100	.356
126 to 131	These readings not used because of shaft vibration.										
132	738	2420	Water	Opaque	515	164	351	.262	414	14100	.287
133	752	2427			528	165	363	.271	415	14200	.295
134	870	2701			626	186	440	.590	462	19700	.446
135	890	2800			641	195	446	.585	479	22000	.396
136	830	2782			595	194	401	.538	475	21500	.373
137	1140	2910			787	205	582	.780	498	24600	.472
138	1250	3050			820	214	606	.814	521	28340	.424

Water Temperature = 55°F for run numbers 105 through 131.
Water Temperature = 67°F for runs 132 to 138.

TABLE XV

DATA and CALCULATED VALUES for 4" SIX-BLADED TURBINE IN WATER

Run No.	Watts Input	RPM	White Insulation Lifted	Black Insulation Lifted	Motor Output Watts	Losses Watts	Impeller Power Watts	Impeller Horse-power	Reynold's Number (10^{-3})	N^3 $(x10^{-6})$	Power Number
Variable Speed Pulley on Motor Shaft											
139	534	1716			331	109	221	.296	296	5050	.877
140	478	1607	12 to 14"	8 to 10"	280	100	180	.241	274	4150	.872
141	416	1421			225	90	135	.181	243	2870	.881
142	372	1317			185	88	97	.130	225	2270	.854
143	339	1146	10"	6"	155	83	72	.0965	196	1500	.867
144	310	973			130	80	50	.0670	166	920	.953
145	294	852			115	76	39	.0523	146	620	1.06
146	284	787	6"	Tumbled	105	75	30	.0402	135	490	1.22
147	306	654			127	79	48	.0643	113	280	1.11
148	322	1020			142	82	60	.0804	175	1060	.950
149	356	1210			172	85	87	.117	207	1770	.990
Variable Speed Pulley on Impeller Shaft											
150	535	1706	12 to 15"	10"	332	126	206	.277	296	5000	.795
151	620	1860			409	132	277	.371	321	6430	.860
152	757	2062			535	140	395	.530	356	9000	.776
153	1020	2557	Water clouded		734	171	563	.755	440	16700	.711
154	916	2250	15 to 16"	15 to 16"	662	154	508	.681	384	11400	.791
155	930	2290			673	156	507	.680	394	12000	.786
156	754	2115			531	147	384	.515	365	9460	.815
157	656	1979			441	138	303	.406	336	7700	.735
158	563	1810			355	130	225	.302	312	5930	.732

TABLE XVI

DATA and CALCULATED VALUES for 4" SIX-BLADED TURBINE in 20% SUCROSE SOLUTION

Run No.	Watts Input	RPM	White Insulation Lifted	Black Insulation Lifted	Motor Output Watts	Losses Watts	Impeller Power Watts	Impeller Horse-power	Reynolds Number (x10^{-3})	N^3 (x10^{-6})	Power Number
Variable Speed Pulley on Motor Shaft											
159	576	1736		10 to 12"	368	111	257	.344	165	5210	.904
160	510	1557	13 to 15"		308	97	211	.283	148	3770	1.03
161	442	1466	11-13"	8 to 10"	247	92	155	.208	139	3150	.905
162	393	1342		6 to 8"	206	89	117	.157	127	2420	.935
163	356	1210			171	85	86	.115	115	1770	.890
164	322	1070	6"	3"	110	52	58	.0776	102	1220	.871
165	300	925			120	78	42	.0563	88	790	.976
166	236	785	4"	1/2 to 1"	107	75	32	.0429	75	480	1.22
167	304	945			124	79	45	.0603	90	840	.934
168	362	1132			148	83	65	.0871	108	1450	.924
169	365	1266			179	86	93	.125	120	2030	.845
170	412	1420			220	90	130	.174	135	2860	.834
171	465	1580			263	93	170	.228	150	3940	.800
172	534	1720			330	110	220	.295	163	5090	.795
173	566	1792			358	117	241	.323	170	5790	.765
Variable Speed Pulley on Impeller Shaft											
174	544	1707			339	126	213	.286	162	4980	.786
175	603	1817	15"	15"	397	130	267	.358	173	5990	.817
176	656	1915	Liquid Opaque		463	130	333	.446	182	7000	.874
177	800	2112			571	145	426	.570	201	9400	.831
178	960	2294			694	156	538	.720	218	12000	.822
179	1060	2372			772	161	611	.820	225	13400	.838
180	850	2129			615	146	469	.628	203	9600	.896
181	728	1980	Liquid Opaque		506	138	368	.494	188	7750	.874
182	638	1822			425	131	294	.394	173	6050	.893
183	596	1735	Liquid	Cloudy	386	127	259	.348	165	5200	.916
184	562	1690			355	125	230	.308	161	4800	.878

Liquid Temperature = 68°F

Run No.	Watts Input	RPM	White Insulation Lifted	Fleck Insulation Lifted	Motor Output Watts	Losses Watts	Impeller Power Watts	Impeller Horse-power	Reynold's Number (x10^{-3})	N^3 (x10^{-6})	Power Number
Variable Speed Pulley on Motor Shaft											
185	574	1750			372	113	259	.348	56.9	5350	.925
186	520	1617	16"	14"	314	101	213	.292	52.0	4210	.930
187	450	1453			256	92	164	.220	47.3	3080	.907
188	385	1296	12 to 14"	10 to 12"	197	87	110	.148	42.2	2180	.962
189	347	1140			163	84	79	.106	37.0	1480	.920
190	315	1020	8 to 9"	2"	135	81	54	.072	33.2	1060	.862
191	294	852			116	77	39	.052	27.7	620	1.06
192	237	770			110	75	35	.047	25.0	459	1.30
Variable Speed Pulley on Impeller Shaft											
193	607	1678			397	124	273	.366	54.4	4700	.99
194	702	1800	Solution Opaque		485	130	355	.474	58.5	5820	1.03
195	836	2000			603	139	464	.621	65.0	8000	.986
196	1036	2188			743	149	594	.795	71.1	1050	.962
197	1130	2294			805	156	649	.870	74.6	12000	.920
198	970	2116			701	145	556	.745	68.7	9400	1.00
199	776	1940	Solution Opaque		551	136	415	.556	63.0	7300	.963

Liquid Temperature = 69°F

TABLE XVII

DATA and CALCULATED

VALUES FOR 4" SIX-

BLADED TURBINE

in 40% SUCROSE SOLUTION

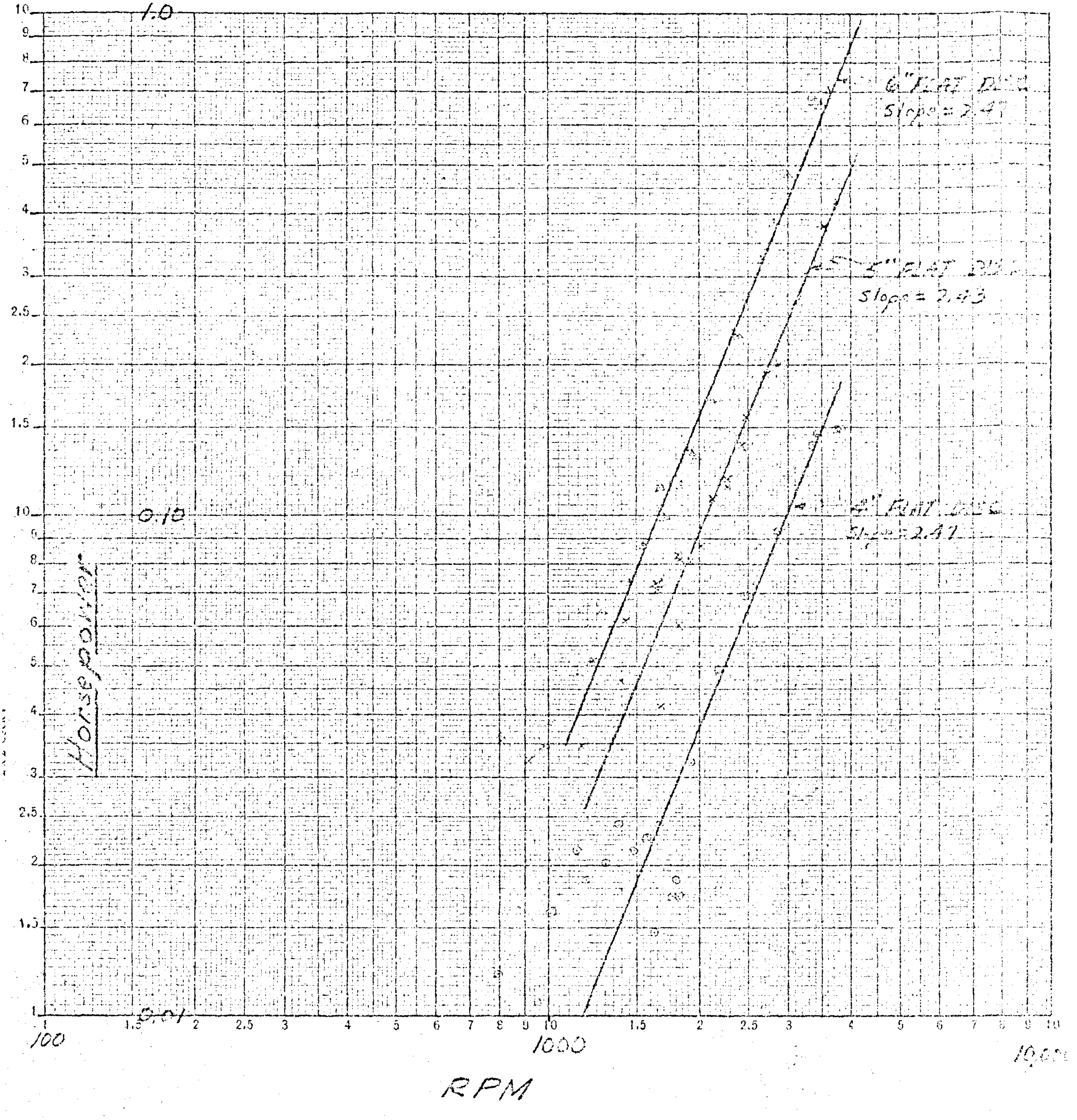

FIG. XV

ALL TESTS RUN IN WATER

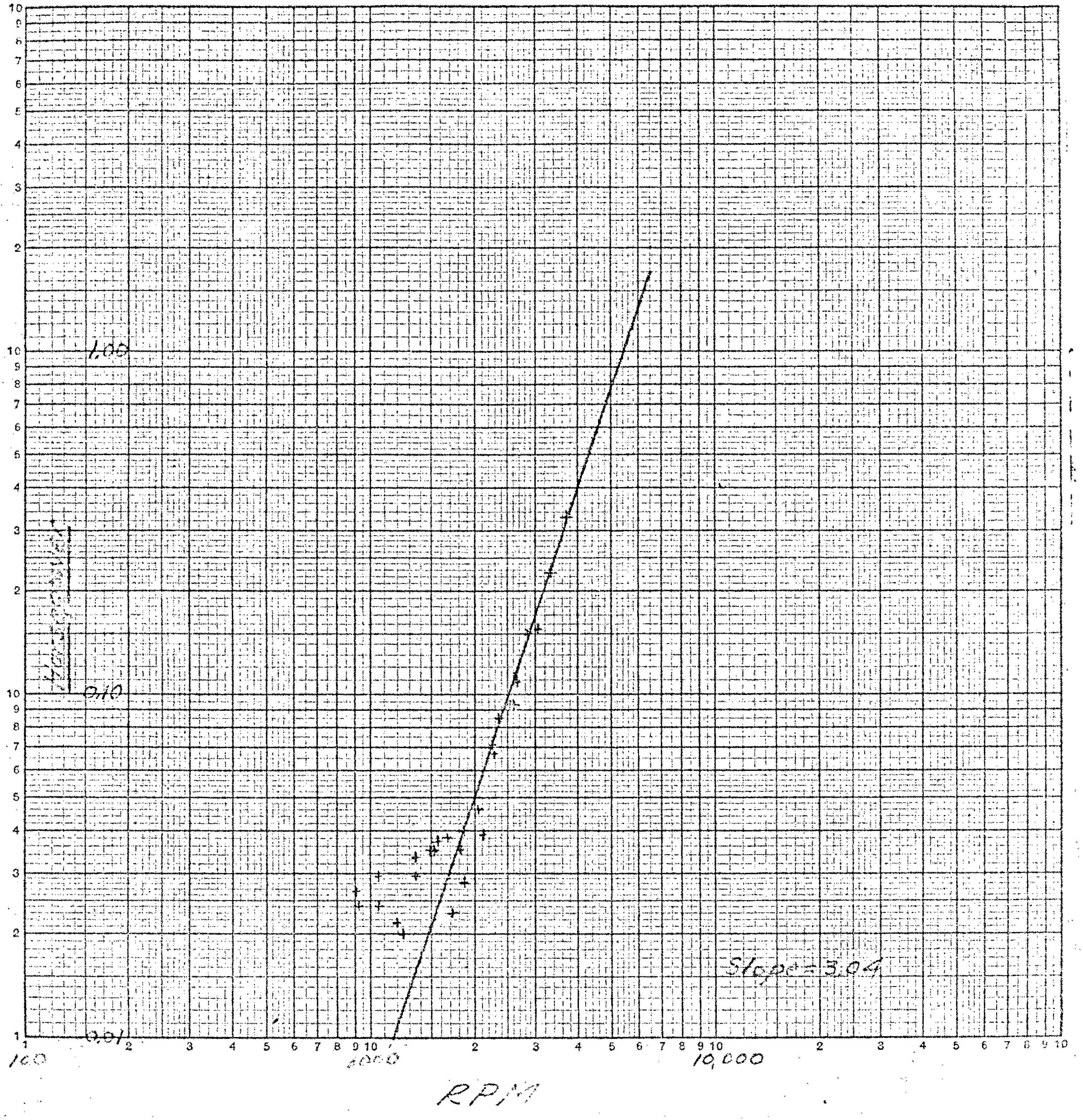

FIG. XVI

3" SAWTOOTH TEST RUN IN WATER

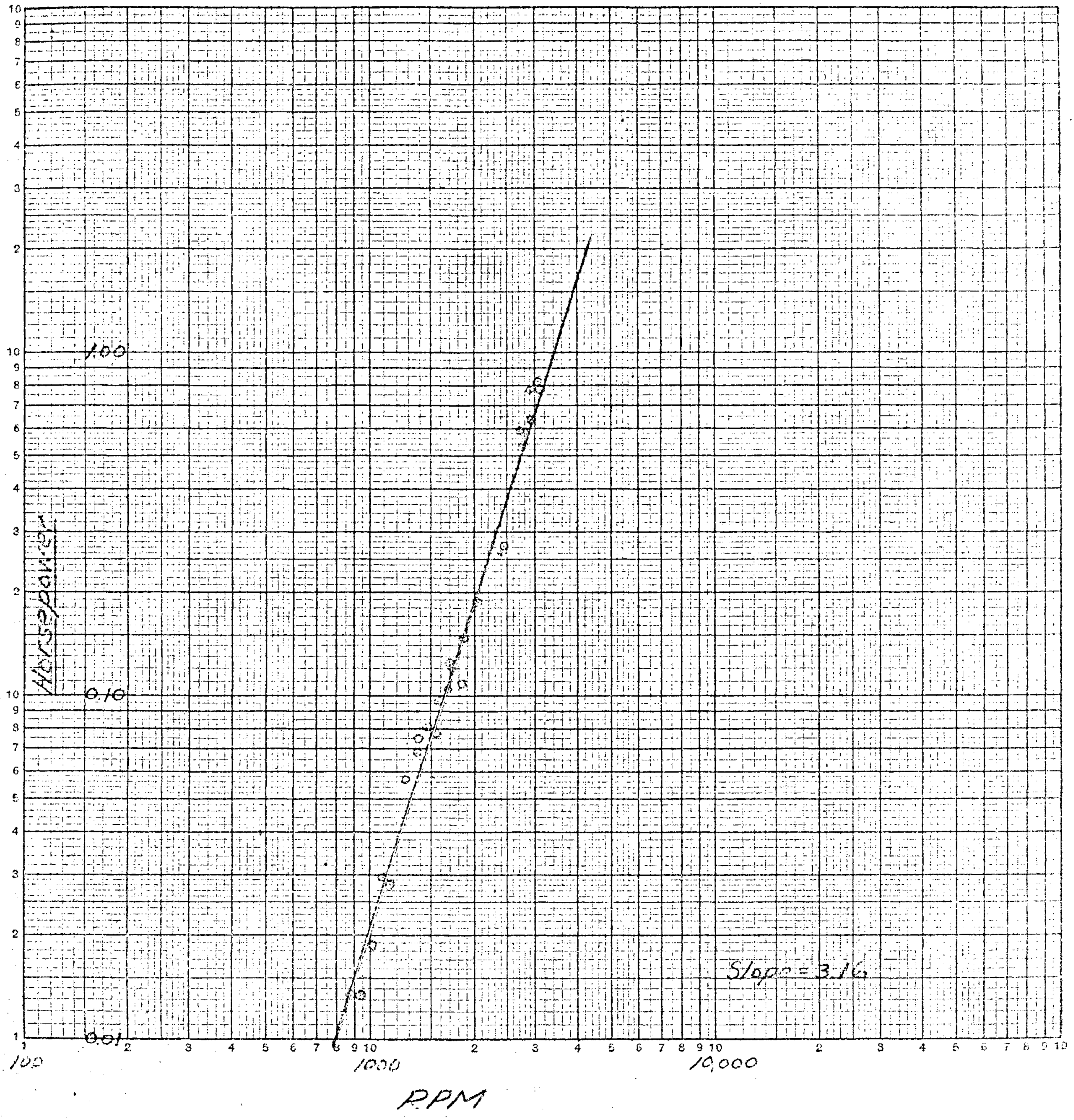

FIG. XVII

4" DIA. SAWTOOTH IMPELLER IN WATER

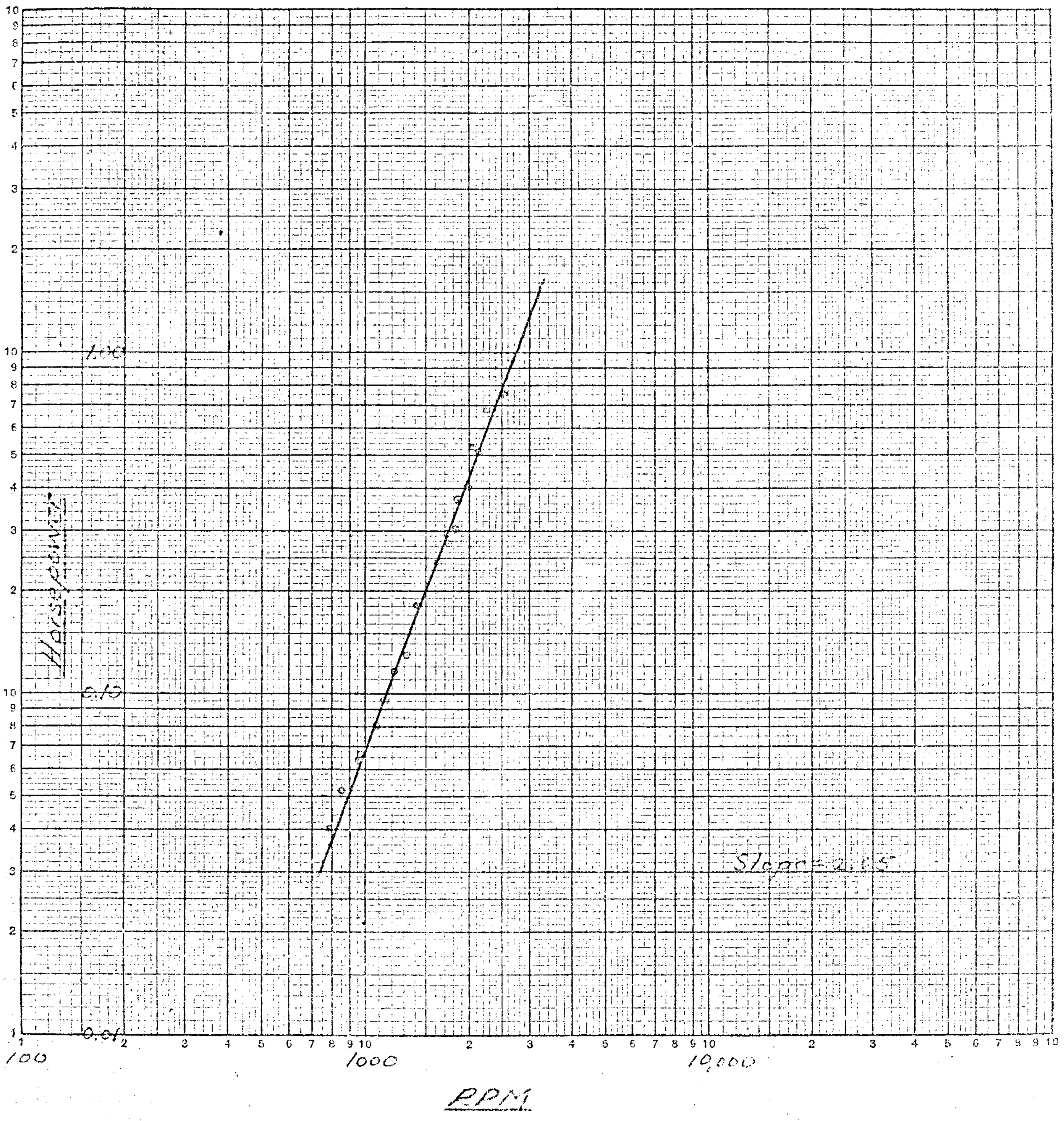

FIG. XVIII

4" DIA. 6 BLADE TURBINE IN WATER

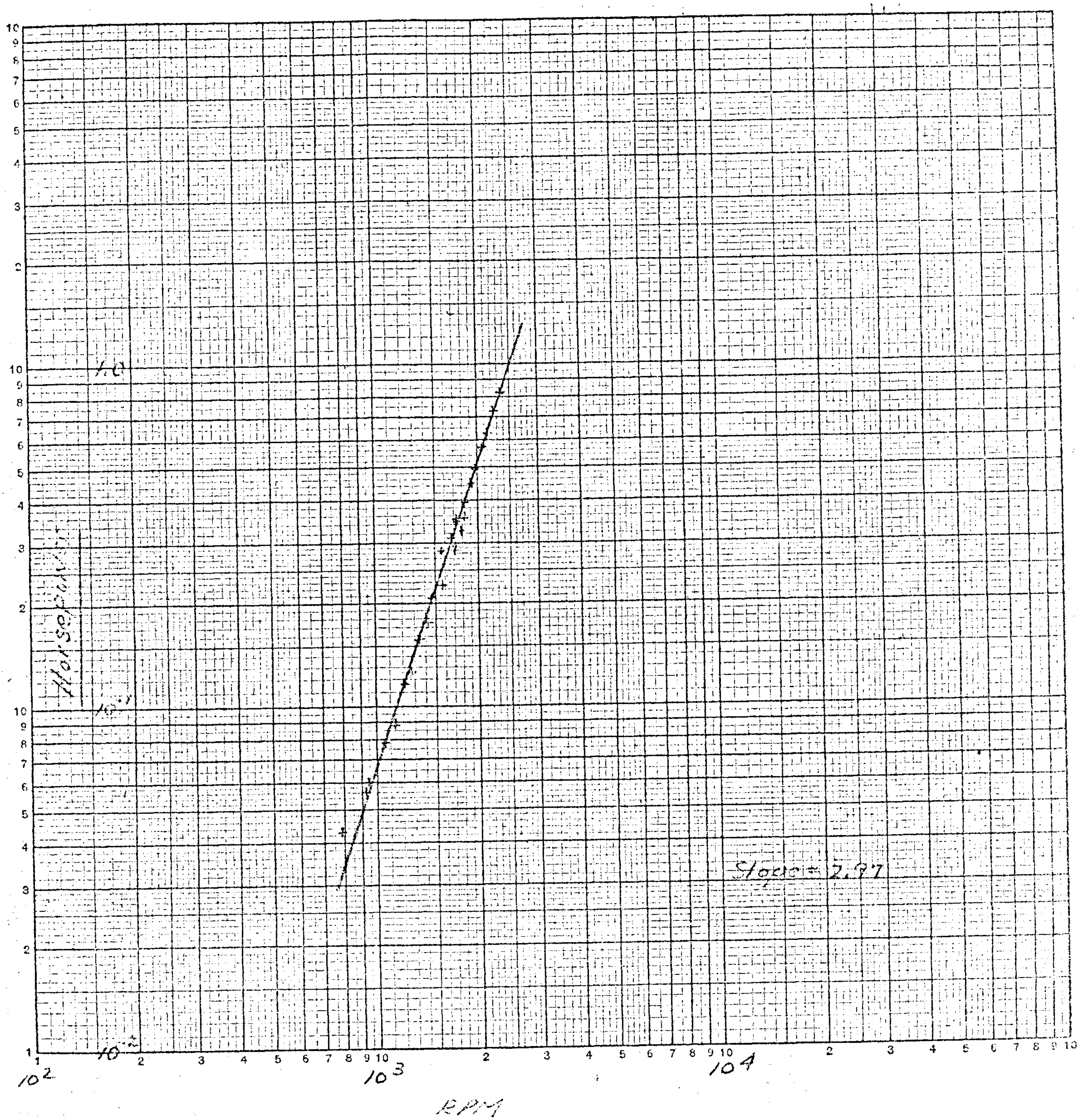

4"-Six Bladed Turbine in 20% Sugar Solution

FIG. XIX

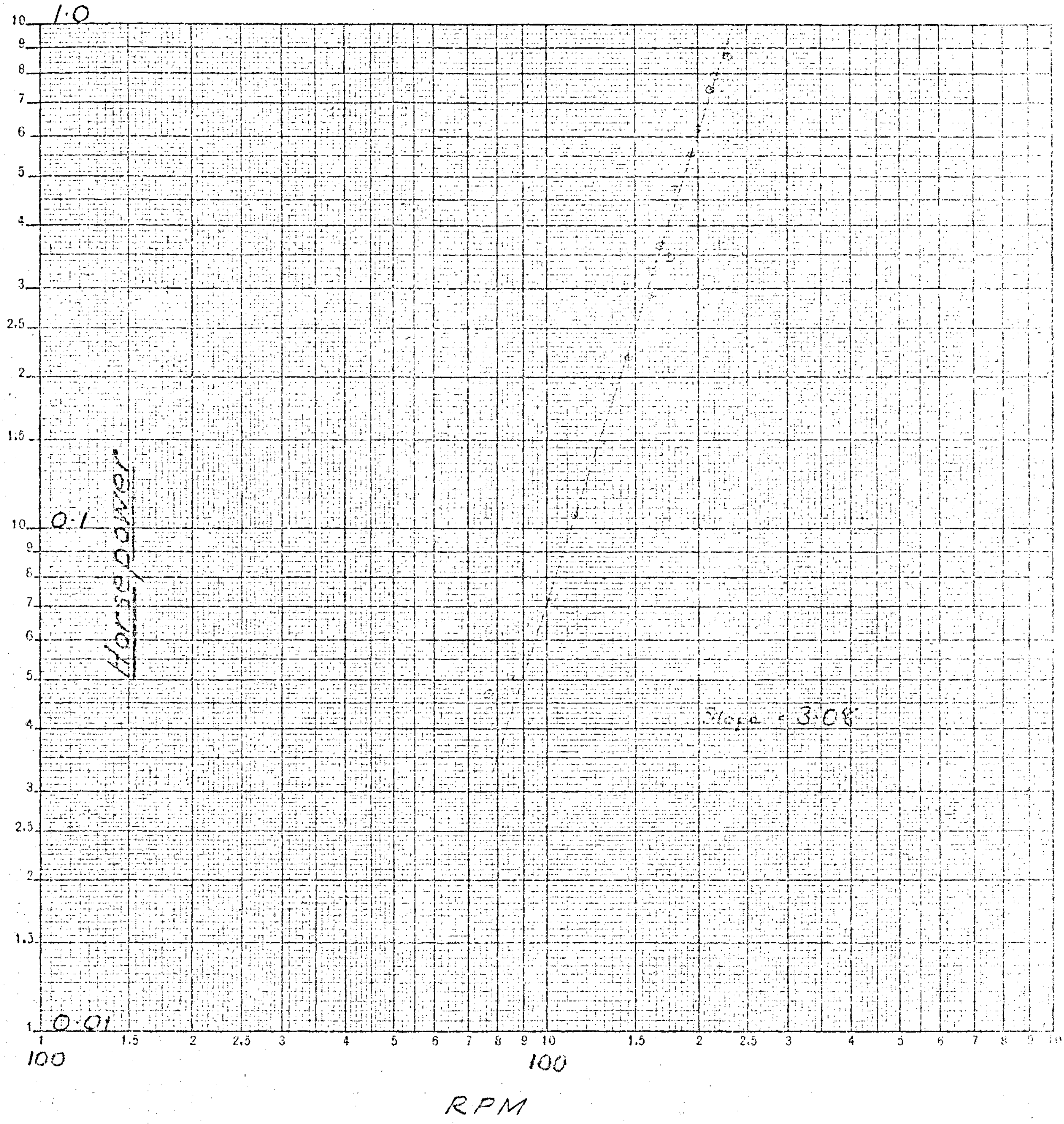

4"- SIX BLADED TURBINE IN 40% SUGAR SOLUTION

FIG. XX

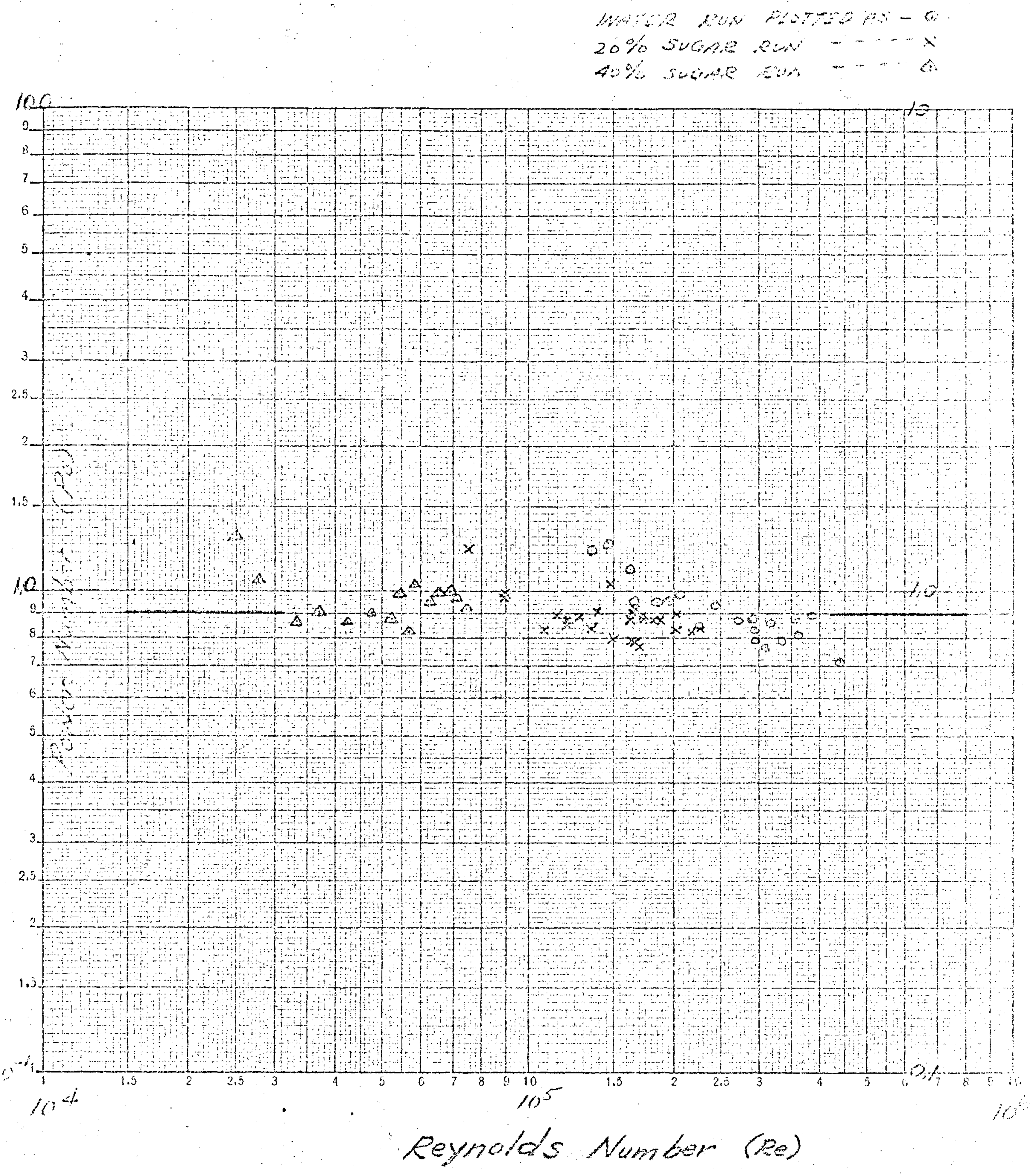

4"-Six Bladed Turbine

FIG. XXI

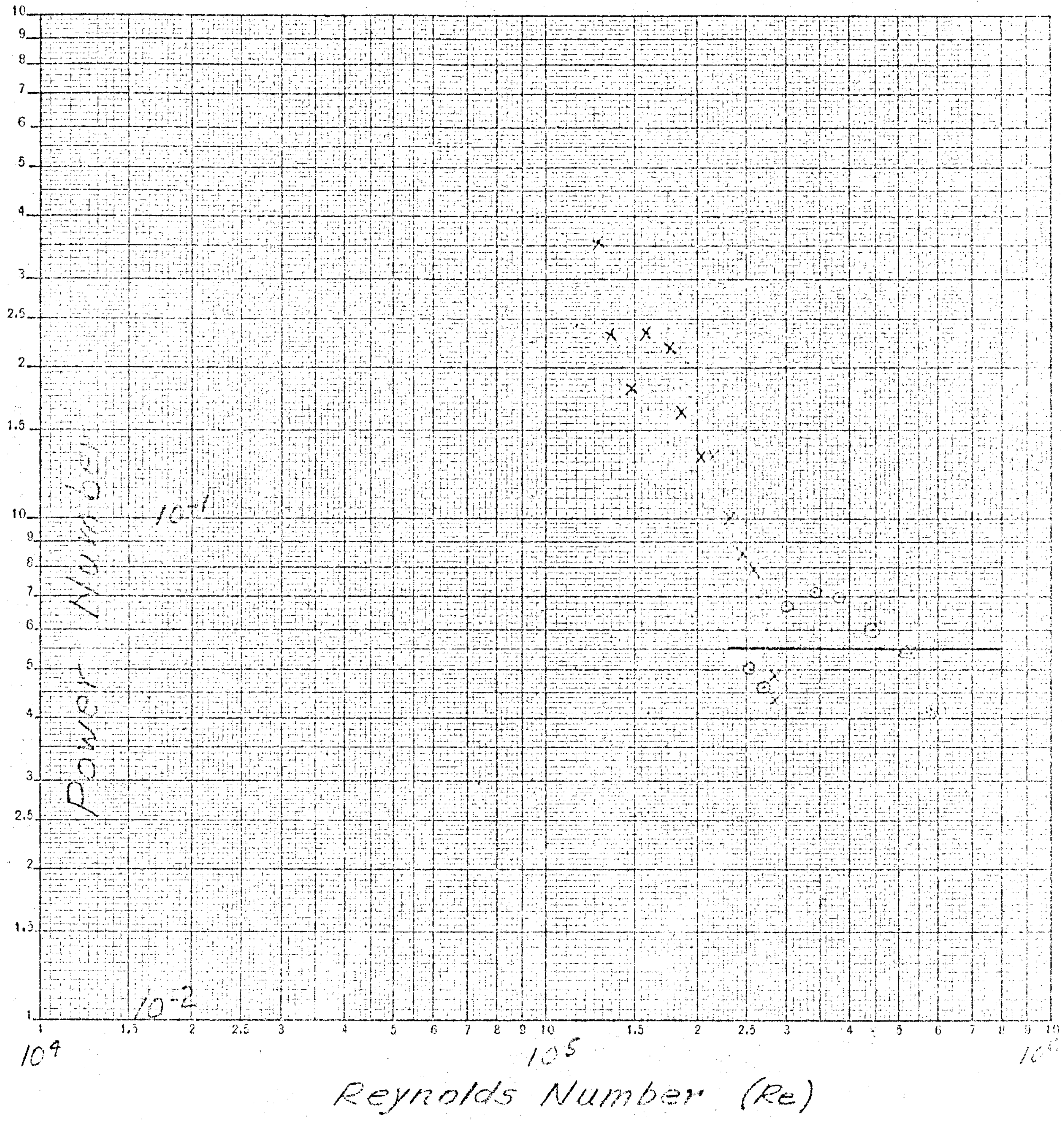

Reynolds Number (Re)

4" FLAT DISC IN WATER

FIG. XXII

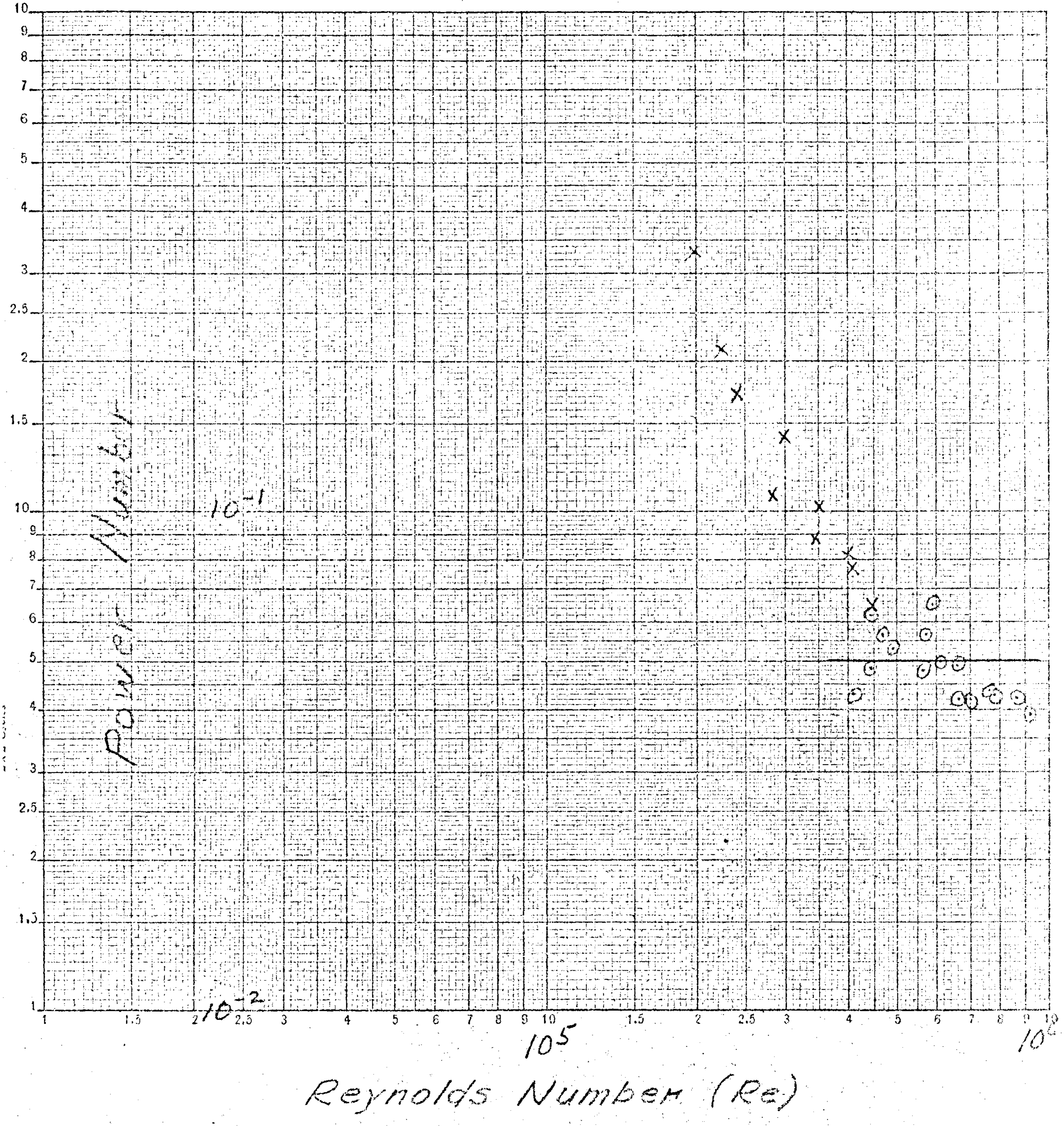

5" FLAT DISC IN WATER

FIG. XXIII

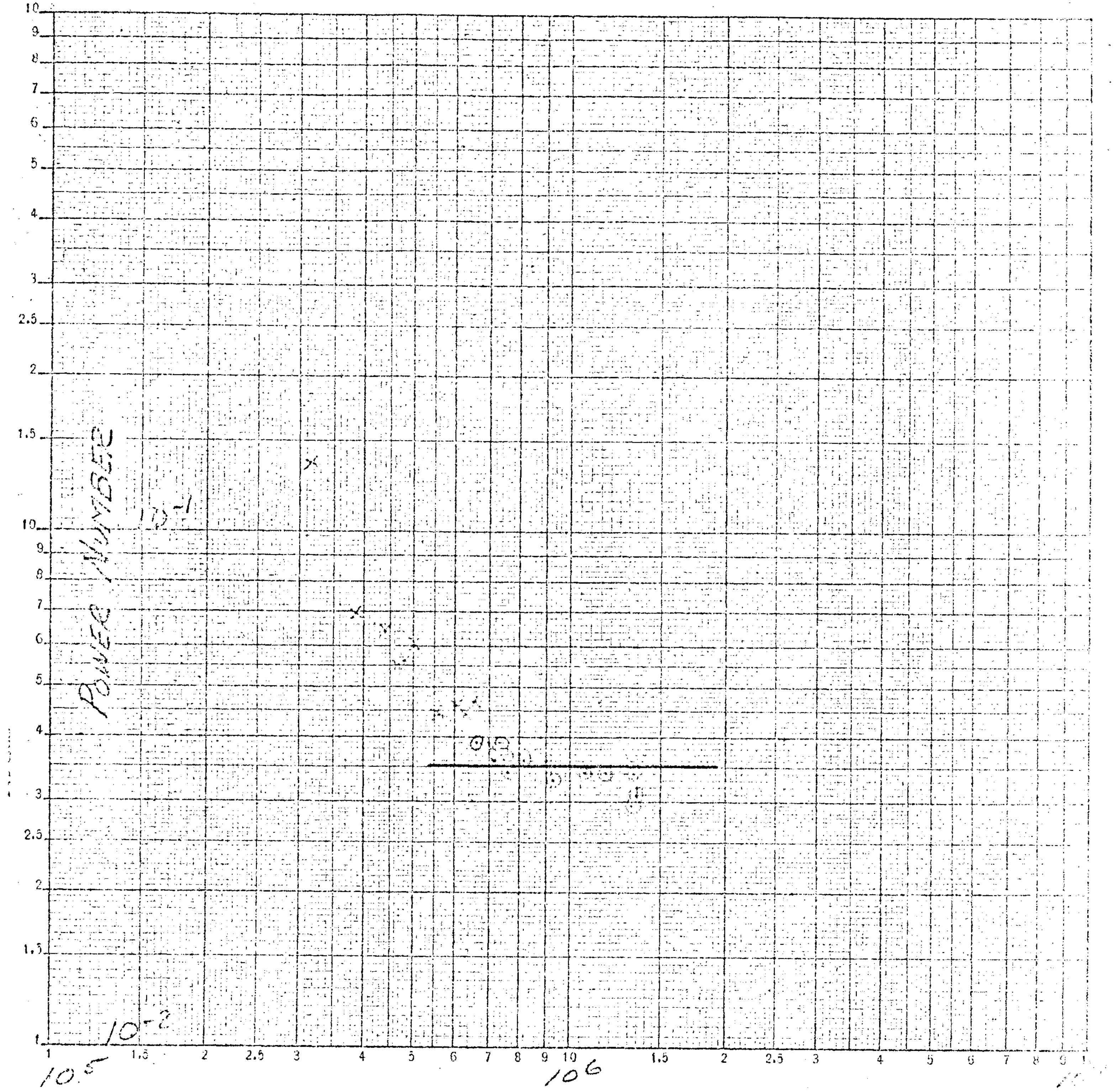

Reynolds Number (Re)

6' FLAT DISC IN WATER

FIG. XXIV

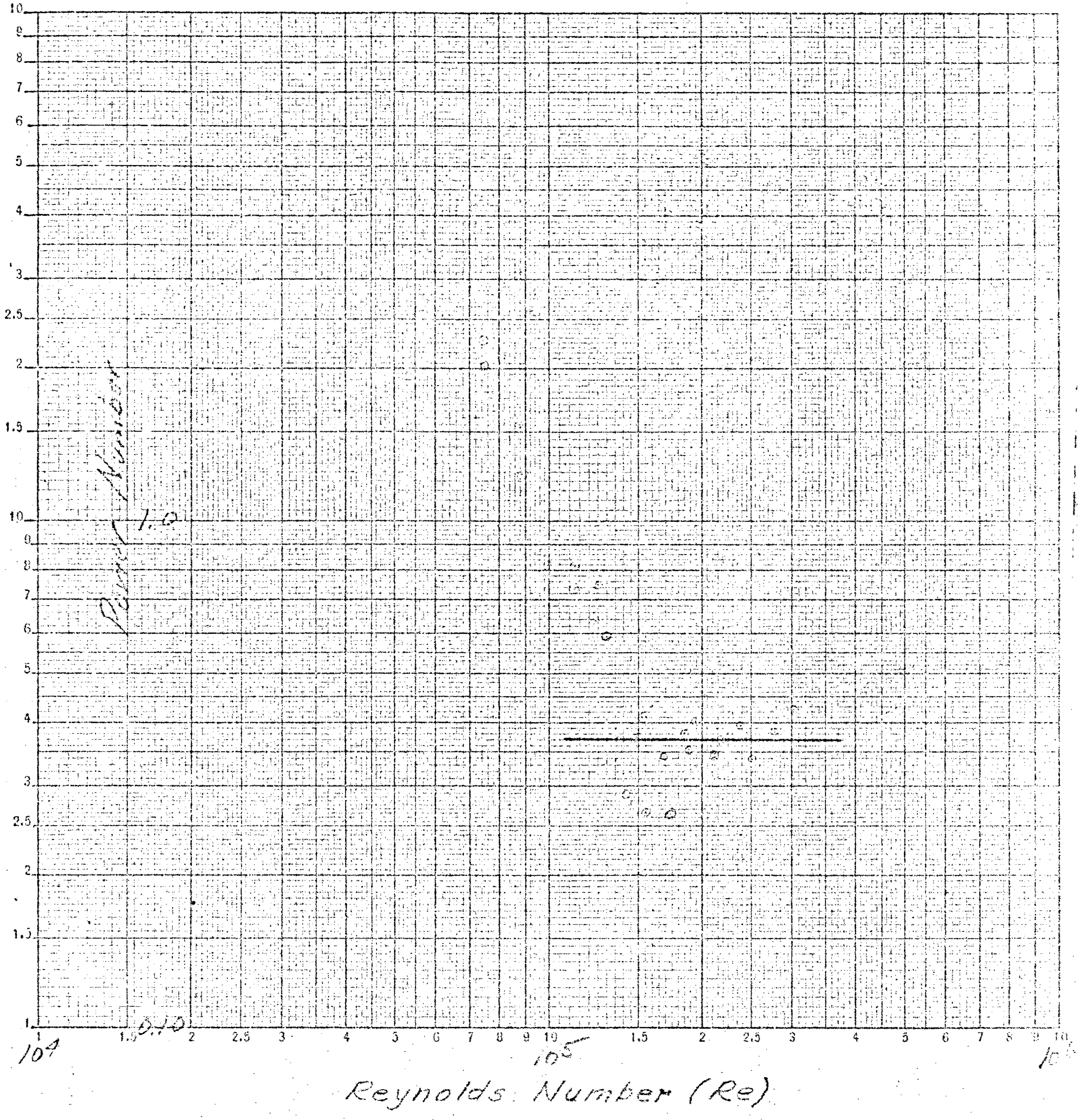

3" SAW TOOTH DISC IN WATER

FIG. XXV

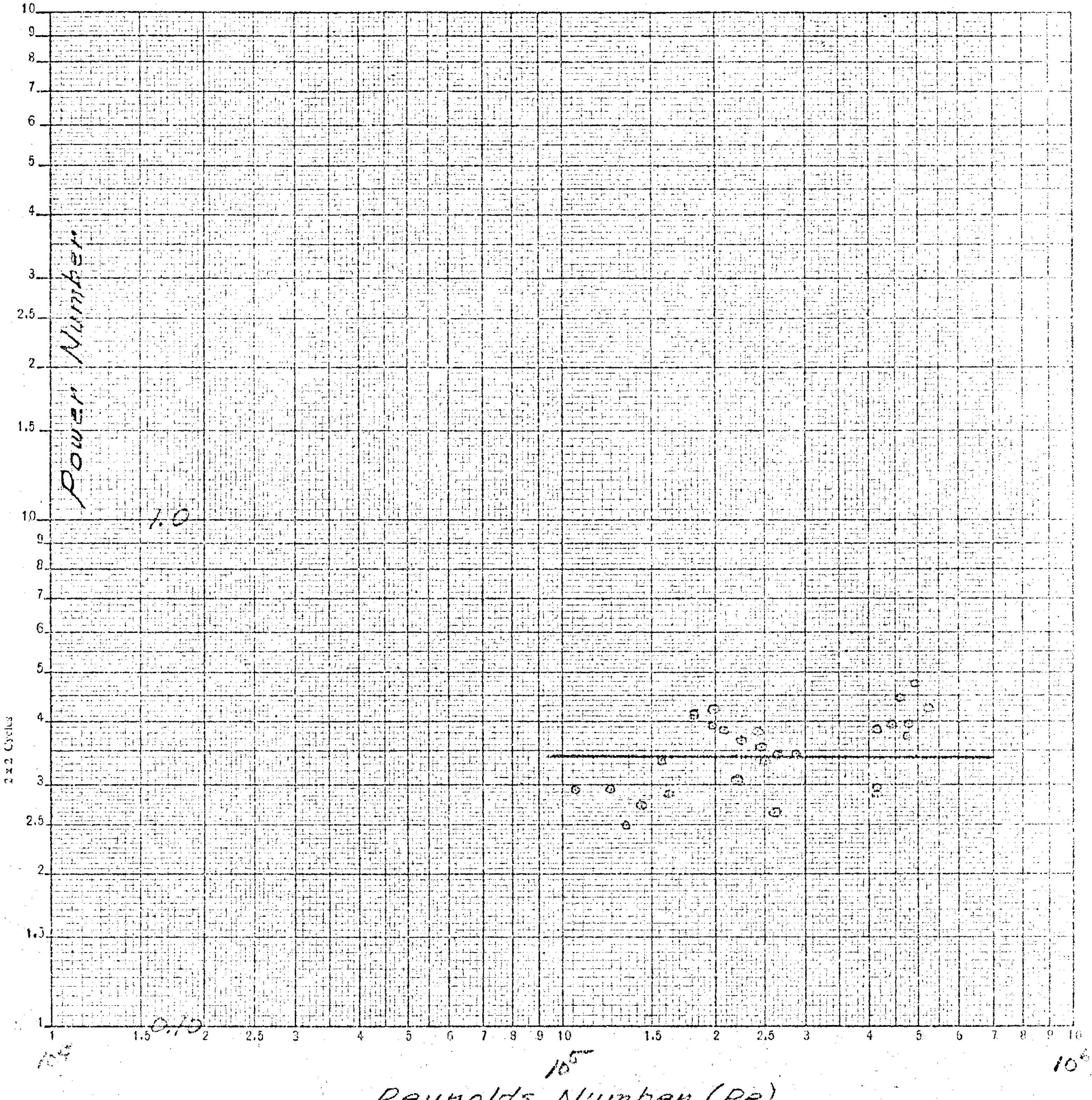

Reynolds Number (Re)

4" SAWTOOTH DISC IN WATER

FIG. XXVI

VIII DISCUSSION AND CONCLUSION

1. Power Number - Reynolds Number correlation for 4" six-bladed turbine:

The horsepower consumed by the 4" diameter six-bladed turbine over the range of Reynolds Numbers 10^4 to 10^6, can be correlated by the equation:

$$HP = \frac{0.9L^5N^3\rho}{550\ gc} = 5.08\times10^{-5}L^5N^3\rho$$

This equation can be used to predict the horsepower of similar impellers in vessels of geometrically similar construction. The geometric ratios to be maintained are:

a) $\frac{\text{Vessel Diameter}}{\text{Impeller Diameter}} = \frac{D}{L} = 4.5$

b) $\frac{\text{Liquid Depth}}{\text{Vessel Diameter}} = \frac{H}{D} = 1$

c) $\frac{\text{Baffle Width}}{\text{Vessel Diameter}} = \frac{b}{D} = .15$

d) $\frac{\text{Impeller Depth}}{\text{Impeller Diameter}} = \frac{w}{L} = .085$

e) $\frac{\text{Turbine Blade Length}}{\text{Impeller Diameter}} = \frac{M}{L} = .19$

2. Power Number - Reynolds Number Correlation for the other impellers used.

For the other discs used, the following equations would appear to be applicable over the same Reynolds Number range:

($H/D = 1$, $b/D = .15$ in all cases)

Impeller	Equation	D/L	w/L
4" Flat Disc	$HP = \frac{.055L^5N^3\rho}{550\ gc}$	4.5	.0208
5" Flat Disc	$HP = \frac{.045L^5N^3\rho}{550\ gc}$	3.6	.0208
6" Flat Disc	$HP = \frac{.035L^5N^3\rho}{550\ gc}$	3.0	.0208
3" Saw Tooth Disc	$HP = \frac{.370L^5N^3\rho}{550\ gc}$	6.0	.091
4" Saw Tooth Disc	$HP = \frac{.340L^5N^3\rho}{550\ gc}$	4.5	.091

In Section VII, Results, it was noted that the Power Numbers for the above five impellers were selected on the basis of the cluster of points which occurred in each case. For the three flat discs and the 3" saw tooth disc, a number of points were disregarded because they occurred below 0.04 horsepower, in the region of least accuracy of measurement. The location of these points follows a definite trend in all four cases just mentioned, and it therefore can not be assumed that these points are in error. Examination of figures XXII, XXIII, XXIV, and XXV would seem to indicate that a pseudo-viscous or transition type of fluid flow was encountered. This actually took place, for at those values of the Reynolds Number where the Power Numbers rise above the cluster of points, the impellers under consideration did not produce turbulent flow throughout the vessel. This was borne out visually. At low speeds the flat discs and the 3" saw tooth disc did not move the pieces of white insulation at all. This indicated that while the nature of the fluid flow immediately adjacent to these impellers may have been turbulent, a considerable portion of the liquid in the vessel was in viscous flow. On the other hand, an examination of the remarks column on the data sheets, will show that the 4" saw tooth and 4" six-bladed turbine impellers lifted the pieces of white insulation six to seven inches at the lowest speeds observed, and for these impellers there was no appreciable rise in Power Number as the value of the Reynolds Number decreased during each run. At the Reynolds Numbers observed, the power consumption of the flat discs in the lower speed ranges used, is probably of academic interest only, as they did not produce agitation, which would normally be useful in an industrial application.

3. Horsepower - Speed Correlation for Flat Discs.

The three flat discs used gave slopes on a Horsepower vs RPM plot which were almost identical as shown by Fig. XV. It therefore, should be possible to predict the location of the HP vs Speed line for a flat disc of different size. The equation for the HP vs Speed line is:

$$HP = KN^{a}$$

or

$$\log HP = a \log N \text{ plus } \log K$$

Where 'a' is the slope determined above (2.46 average), 'K' is the intercept of the log HP vs log N plots and should be a function of the impeller diameter 'L'. In order to determine the relation between 'L' and 'K' it was decided to plot the values of N for the three discs when HP = 0.1 (rather than determine K at log N = 0) on log-log coordinates. The values of N at HP = 0.1 are:

Impeller	N
4"	2970
5"	2070
6"	1660

This plot is shown on Fig. XXVIII. The points fall in almost a straight line and the line drawn can probably be used between L = 3.5" to L = 7" with sufficient accuracy for industrial application to predict the location of HP vs N lines for other flat discs.

For example a 4-1/2" disc from Figure XXVIII would consume .10 HP at 2450 RPM. This point can be plotted on Fig. XV and a line drawn through this point with a slope of 2.46 (or parallel to the other curves). The horsepower can then be read from this plot for other speeds.

If the disc is being operated in a fluid other than water, then this curve can still be used for predicting the horsepower, provided the Reynolds Number is over 10^4. As shown by equation (8c) the horsepower is directly proportional to the density of the liquid and in the range of $Re > 10^4$ the power is independent of viscosity. Consequently the line plotted for the 4-1/2" disc on Fig. XV can be read to give horsepower demand in water, and multiplied by the specific gravity of the actual fluid used, to give power consumed.

FIG. XXVII

HORSEPOWER-RPM CORRELATION FOR FLAT DISCS

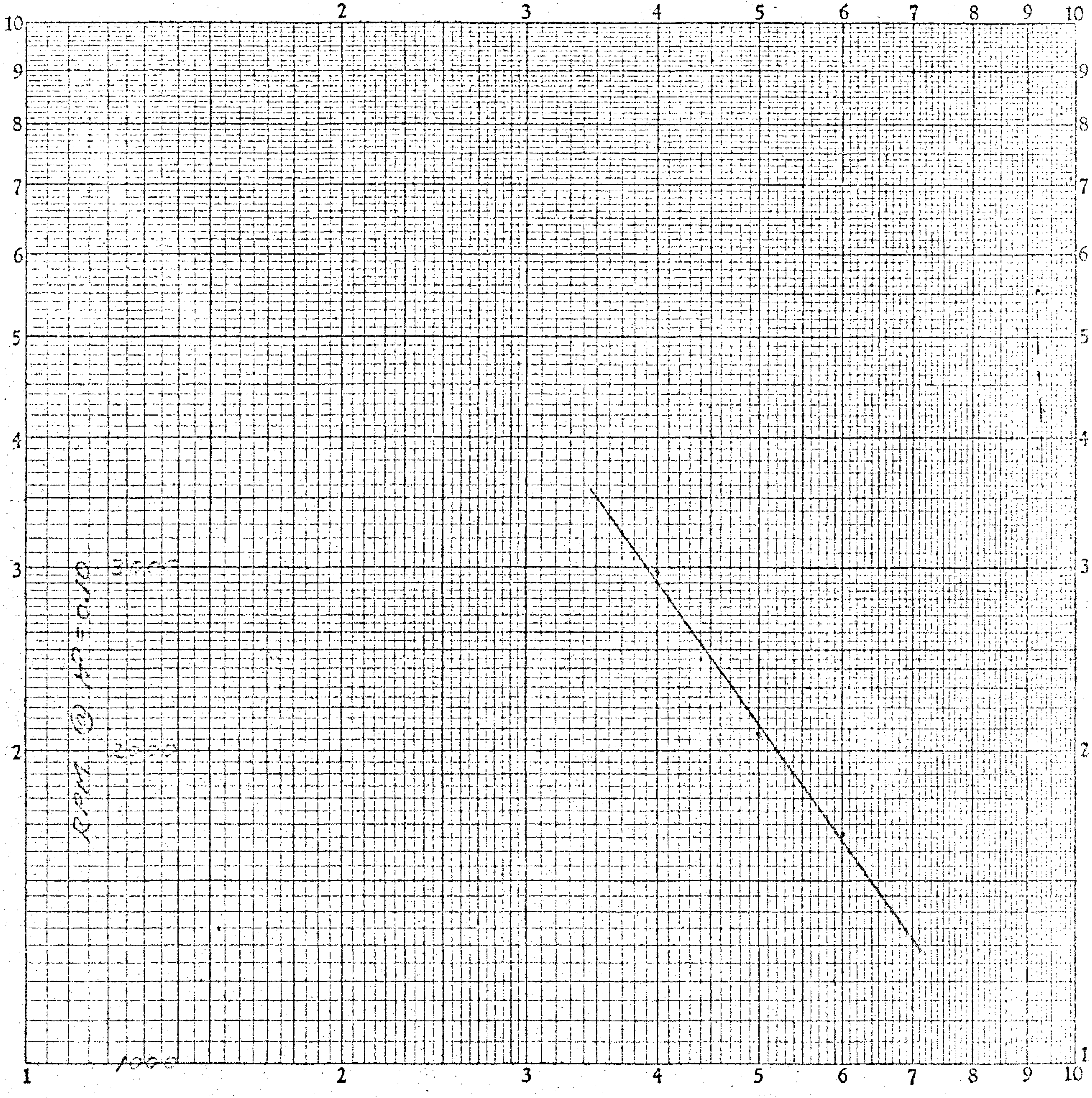

4. Some Special Uses for Discs

The flat disc impellers and possibly the turbine type discs may be useful in some agitation services where attrition of particles must be kept to a minimum, such as a crystallization operation where it is important that the impeller does not break the crystals. It was observed during the runs that the pieces of insulation almost never actually touched the flat discs used, but moved down the shaft and then out parallel and close to the disc surface. The saw tooth impeller on the other hand would catch the pieces of insulation with the upward and downward projecting teeth and produce an audible ping sound. The pieces of insulation were badly cut and nicked after a saw-tooth impeller run. If the pieces of insulation had been of a material any less tough, they would have been completely shredded. The saw-tooth disc is therefore applicable in mixing services where high attrition may be required, for example, making an asbestos fiber slurry. Most conventional turbines and propellers would give much higher attrition than the flat disc and much lower attrition than the saw-tooth disc.

5. Peripheral Speed and Quality of Agitation

The peripheral speed at which the discs produced satisfactory agitation throughout the mass of liquids was considerably higher than the 700 ft/min reported in the literature by many authors for conventional impellers. This may be seen in Table IX. Here the RPM and peripheral speed required to raise the black and white pieces of insulation 9", are given. Generally when the black insulation was raised 9", the white insulation was raised to the top of the liquid and the agitation was very violent. When the white insulation was lifted about 9", a mild agitation and liquid flow action reached all parts of the vessel. In all cases the peripheral speed is over 1000 ft/min. For the flat discs, about 2300 ft/min peripheral speed produced mild agitation; while about 3800 ft/min was required to produce violent agitation. A comparison of all impellers on this basis is given by the following table:

TABLE XVIII

Peripheral Speeds vs Quality of Agitation

Type of Impeller	Peripheral Speed Producing Mild Agitation Throughout Ft/min	Peripheral Speed Producing Violent Agitation Throughout Ft/min
Flat Disc	2300	3800
Saw Tooth Disc	1400	2000
Six-Bladed Disc	1150	1500

6. Direct Connection of Impellers to Motor Shaft, Without Speed Reducers.

The impellers used in this experiment can definitely be direct - connected to motors without intermediate drives or speed reducing devices, and sized to produce excellent agitation. There are two mechanical problems involved in this procedure. Most agitator shafts go through a stuffing box and the packing must frequently hold pressure. This, however, is no worse a problem than encountered in centrifugal pumps. The other mechanical problem is that of critical speed or natural frequency at which speed the shaft vibrates and can destroy itself. This problem is sometimes encountered even with propeller and turbine type agitators. Fortunately the critical speed of a given agitator assembly can be calculated. After a unit is designed to produce a given type of agitation, it should then be checked to determine its critical speed. If the critical speed and operating speed coincide, then the design must be changed and then rechecked for critical speed, so that the final operating speed differs from the critical speed. A relatively quick method of doing this is given by H. C. Hesse in "Product Engineering", Dec. 1950, p. 90. Aside from the two problems just discussed, the experiments conducted revealed no other problems in direct-connecting a motor to run the disc type agitators used. It is suggested that the motor be connected to the agitator shaft through a flexible coupling and some care be taken to align the motor and impeller shaft.

7. Method of Power Measurement Used:

The method of power measurement used in this experiment produced results of satisfactory accuracy. The equipment required is more readily obtained, built and calibrated than a spring dynamometer which requires a stroboscope in order to make readings. Certain improvements may be made, as well as suggestions, concerning this method of power measurement. They are:

1) Place the prony brake assembly on the impeller shaft rather than the motor shaft and determine all the losses at one time.
2) Using a spring scale of finer subdivision than one ounce for the prony brake test and shorten the lever arm.
3) Keep a voltmeter in the power supply line. (This was done in this case) Take readings only at the same input voltage, otherwise the copper losses in the motor will vary considerably.

8. Conclusion.

The results obtained from the experiments made, show that disc impellers may produce excellent agitation, that they can be direct-connected to standard motors without speed reducing mechanisms and that the correlations previously derived for horsepower of other impellers, may be applied to discs.

IX APPENDIX

FIG XXVII

Photographs of 4" Six Bladed Turbine in Operation

Sheet 1 of 3

NEWARK COLLEGE OF ENGINEERING

Dept	CHEM. ENG.	**Student**	I. RUBIN		
Subj	Motor Calibration	**Prob. No**	THESIS	**Date**	
Time:	BY PRONY BRAKE	**Section**		**Roll No**	

RUN. NO.	METER READING	WATTS INPUT	SCALE READING LBS.-OZ	WEIGHT CHANGE LBS.-OZ	WEIGHT CHANGE LBS.	MECH HP	MECHANICAL WATTS (OUTPUT)	EFFICIENCY %	RPM
1	176	352	27-14	0-13	0.81	.225	168	47.8	1750
2	193	386	27-11	1-0	1.00	.281	210	54.5	1771
3	218	436	27-7	1-4	1.25	.320	238	54.8	1775
4	248	496	27-3	1-8	1.50	.423	316	63.6	1780
5	274	548	26-15	1-12	1.75	.493	368	67.0	1776
6	314	628	26-10	2-1	2.06	.577	430	68.5	1770
7	365	730	26-4	2-7	2.44	.685	511	70.0	1770
8	374	748	26-2	2-9	2.56	.720	538	71.9	1768
9	402	804	25-15	2-12	2.75	.770	575	71.6	1765
10	434	868	25-11	3-0	3.00	.830	620	71.5	1758
11	469	938	25-8	3-3	3.19	.883	659	70.2	1743
12	563	1126	24-11	4-0	4.00	1.095	818	72.6	1727
13	524	1048	25-3	3-8	3.50	.964	712	72.0	1735
14	455	910	25-9	3-2	3.12	.865	645	71.0	1747
15	406	812	25-13	2-14	2.88	.800	597	73.5	1750
16	373	746	26-2	2-9	2.56	.715	534	71.4	1760
17	360	720	26-4	2-7	2.44	.687	513	71.1	1758
18	330	660	26-8	2-3	2.19	.610	455	69.0	1755
19	325	656	26-8	2-3	2.19	.611	456	69.5	1760
20	163	326	27-15	0-12	0.75	.210	157	48.2	1770
21	202	404	27-10	1-1	1.06	.300	224	55.0	1785
22	158	316	28-0	0-11	0.69	.196	146	46.2	1790
23	175	390	27-11	1-0	1.00	.283	211	54.1	1786
24	218	436	27-8	1-3	1.19	.336	251	57.5	1783

DEAD WEIGHT = 28 LBS. - 11 OZ

No LOAD READING
[illegible] 162

No LOAD READING - END OF TEST
24 168 28-11

Plotted as ⊙

Sheet 2 of 3

NEWARK COLLEGE OF ENGINEERING

Dept Chem. Eng. Student I. Rubin

Subj Motor Calibration Prob. No Thesis Date

Time: By Prony Brake Section Roll No.

Run. No.	Meter Reading	Watts Input	Scale Reading lbs. oz.	Weight Change lbs. oz.	Weight Change lbs.	Mech. HP	Mechanical Watts (output)	Efficiency %	RPM
1	240	480	27-6	1-6	1.38	.388	289	60.2	1772
2	220	440	27-9	1-3	1.19	.335	250	56.9	1775
3	287	574	27-0	1-12	1.75	.486	362	63.1	1750
4	321	642	26-10	2-2	2.12	.589	439	68.4	1750
5	349	698	26-6	2-6	2.38	.658	490	70.2	1744
6	420	840	25-13	2-15	2.94	.803	599	71.2	1720
7	472	944	25-6	3-6	3.38	.915	682	72.4	1708
8	520	1046	25-0	3-12	3.75	1.02	760	73.0	1710
9	500	1000	25-3	3-9	3.56	.969	721	72.1	1712
10	380	760	26-0	2-12	2.75	.765	563	74.0	1754
11	330	660	26-8	2-4	2.25	.623	465	70.5	1748
12	300	600	26-14	1-14	1.88	.528	394	65.7	1770
13	285	570	27-2	1-10	1.62	.454	338	59.3	1768
14	273	546	27-4	1-8	1.50	.422	314	57.5	1778
15	240	480	27-7	1-5	1.31	.370	276	57.5	1781

Dead Weight = 28 lbs-12 oz

No load Reading
85 170

1794
1816
1790

Plotted as x.

86

Sheet 3 of 3

NEWARK COLLEGE OF ENGINEERING

Dept Chem. Eng.
Student I. Rubin

Subj MOTOR CALIBRATION BY PRONY BRAKE
Prob. No Thesis
Date

Time:
Section
Roll No.

ZERO WEIGHT = 28 lbs-12 oz.

RUN No.	METER READING	WATTS INPUT	WEIGH SCALE READING lbs.-oz.	WEIGHT CHANGE lbs oz.	WEIGHT CHANGE lbs.	Mech. HP	Mechanical Watts (output)	Efficiency %	RPM
1	168	338	28-2	0-10	.625	.180	131	38.8	1810
	170		28-2						
2	202	403	27-13	0-15	.9375	.268	200	49.6	1808
	201								
3	225								
	221	447	27-11	1-1½	1.094	.310	231	51.6	1788
	224		27-10						
4	251	502	27-7	1-5	1.312	.370	276	55.0	1775
	251		27-7						
5	287	578	27-1	1-11	1.688	.474	353	61.1	1770
6	295								
	324-330	653	26-10	2-2	2.125	.593	442	67.6	1760
	326								
7	375	750	26-6	2-6	2.375	.665	496	66.2	1765
8	395	793	26-2	2-10	2.625	.741	552	69.6	1762
	398								
9	425	858	25-14	2-14	2.875	.802	599	69.8	1760
	429								
10	441	882	25-12	3-0	3.000	.835	630	71.5	1760
11	447	898	25-10	3-2	3.125	.870	649	72.1	1755

No load Readings:

90	180	1812
85	170	1814
85	170	1815

Plotted as •.

Sheet 1 of 3

NEWARK COLLEGE OF ENGINEERING

Dept Chem. Eng. Student I. Rubin

Subj "No Load" Losses at Various Impeller Speeds Prob. No Thesis Date

Time: Section Roll No.

	Meter Reading	Average	Watts (INPUT)	RPM Readings	Average RPM	WATTS OUTPUT (LOSSES)
1	121 122	121.5	243	826 834	830	68
2	122 122	122	244	924 924	924	70
3	126 126	126	252	1020 1016	1018	77
4	127 127	127	254	1116 1118	1117	79
5	127 128	127.5	255	1230 1246	1238	80
6	131 131	131	262	1452 1467	1460	86
7	138 139	138.5	277	1646	1646	99
8	143	143	286	1750	1750	107
9	144	144	288	1806	1806	109
10	146	146	292	1848	1848	113

Variable Speed Pulley on Motor Shaft for all Readings on this sheet. Impeller Shaft running in air.

Sheet 2 of 3

NEWARK COLLEGE OF ENGINEERING

Dept Chem. Eng.
Student I. RUBIN
Subj No Load Losses at Various Impeller Shaft Speeds
Prob. No Thesis
Date April 1955
Time:
Section
Roll No.

	METER READINGS	AVERAGE	WATTS INPUT	RPM READINGS	AVERAGE RPM	(LOSSES) WATTS OUTPUT
1	151	151	302	1625	1625	122
2	154	154	308	1738	1738	127
3	160 161	160.5	321	1854	1854	139
4	163 164	163.5	327	2022	2022	149
5	[illegible]	170	340	2221 2218	2220	156
6	[illegible]	180	360	2390	2390	174
7	[illegible]	188	376	2710 2620 2664	2665	189
8	[illegible]	202	404	2961	2961	213
9	[illegible]	225	450	3376	3376	255
10	[illegible]	253	506	3766	3766	305
11	[illegible]	216	432	3252	3252	238
12	[illegible]	193	386	2860	2860	200
13	[illegible]	175	350	2550	2550	165
14		164.5	329	2184	2184	145
15		158	316	2064 2030	2047	135
16		155	310	1862 1846	1854	129
17		151.5	313	1672	1672	132
18		146	296	1600	1600	116

← CRITICAL SPEED WITH BARE SHAFT. ADDED 3" FLAT DISC.

← CRITICAL SPEED WITH 3" FLAT DISC. VIBRATION MUCH LESS THAN BARE SHAFT.

MAXIMUM SPEED PULLEY ON IMPELLER SHAFT FOR ALL READINGS ON THIS SHEET. IMPELLER SHAFT RUNNING IN AIR.

Sheet 3 of 3

NEWARK COLLEGE OF ENGINEERING

Dept Chem. Eng.
Student I. RUBIN
Subj "No Load" Losses at Various Impeller Shaft Speeds
Prob. No Thesis
Date APRIL, 1955
~~Time~~
Section
Roll No.

	METER READING	AVERAGE	WATTS (INPUT)	RPM Readings	Average RPM	Reading No.	WATTS OUTPUT (LOSSES)
1	150			1906			
	151			1896			
	151	151	302	1896	1899	1	122
2	150			1760			
	152			1772			
	149	150	300		1766	2	120
3	148			1662			
	149	148.5	297	1650	1656	3	117
4	141			1513			
	141	141	282	1506	1510	4	104
5	139			1368			
	141	140	280	1352	1360	5	103
6	[illegible]			1266			
	[illegible]	135.5	271	1260	1263	6	97
7	132			1113			
	133			1110			
	134	133	266		1112	7	89
8	131			946			
	131			[illegible]			
	131	131	262		951	8	85
7	[illegible]			828			
	[illegible]	130.5	261	813	820	9	84
10	[illegible]	132	264	1004	1004	10	87
	[illegible]	133	266	1203	1208	11	89
	[illegible]	136	272	1432	1432	12	94
	[illegible]	145	290	1650	1650	13	111
	[illegible]	144	288	1612	1612	14	110
	[illegible]	151	302	1636	1636	15	122

VARIABLE SPEED PULLEY ON MOTOR SHAFT FOR ALL READINGS ON THIS SHEET. IMPELLER SHAFT RUNNING [illegible].

DATA SHEET

Sheet 1 of 14

NEWARK COLLEGE OF ENGINEERING

Dept Chem. Eng.		**Student** I. Rubin	
Subj 9" DIAMETER FLAT DISC IN WATER		**Prob. No** Thesis - DATA SHEET	**Date**
Time:		**Section**	**Roll No.**

RUN No.	METER READING	AVERAGE	WATTS (INPUT)	RPM READINGS	AVERAGE RPM	REMARKS
1	130		260	798	798	VARIABLE SPEED PULLEY ON
2	130		260	864	864	MOTOR SHAFT
3	132		264	958	958	No Movement of Insulation
4	134		268	1018	1018	↓
5	137		276	1158	1158	
6	138		276	1199	1199	
7	140		280	1302	1302	
8	142		286	1380	1380	
9	143	143.5	287	1460	1478	W.I. begins to move (jiggles)
	144			1496		
10	147	147.5	295	1564	1585	
	148			1606		
11	[illegible]	151	302	1660	1659	W.I. lifted 3-5"
	[illegible]			1658		
12	156	[illegible]	313	1816	1804	
	157			1792		
13	157		314	1820	1820	[illegible] W.I. lifted 5-7"

WATER TEMP START & END 59°F

VARIABLE SPEED PULLEY ON IMPELLER SHAFT

RUN No.	METER READING	AVERAGE	WATTS (INPUT)	RPM READINGS	AVERAGE RPM	REMARKS
14	[illegible]	157.5	315	1650	1631	W.I. lifted 5"
	[illegible]			1600		
				1644		
15	[illegible]	162.5	325	1772	1772	
	[illegible]			1772		
16	[illegible]	172.5	345	1924	1926	
	[illegible]			1928		
17	[illegible]	187	374	2182	2181	W.I. lifted 5-10"
				2180		
18	[illegible]	205.5	411	2452	2463	W.I. lifted 12-13"
				2474		
19	[illegible]	233.5	467	2854	2857	
	[illegible]			2860		
20			582	3430	3430	
21	283		566	3370	3370	
22	[illegible]		[illegible]	3816	[illegible]	B.S. lifted 9-10", W.I. - 14-15"
23	[illegible]		632	3766	3766	"TOP 3" ... WATER EVIDENTLY [illegible]

WATER TEMP [illegible] 59°F [illegible]

ROOM TEMP [illegible] = 60°F

[illegible] BOTTOM [illegible] WATER DEPTH [illegible] 10½"

91

Sheet 2 of 14

DATA SHEET

NEWARK COLLEGE OF ENGINEERING

Dept Chem. Eng. Student L. Rubin

Subj 5" FLAT DISC IN WATER Prob. No Thesis - DATA SHEET Date

Time: Section Roll No.

Run No	Meter Reading	Average	WATTS (INPUT)	RPM Readings	Average RPM	REMARKS
Variable Speed Pulley on Motor Shaft.						
24	140	140	280	805	808	Insulation not moving
	140			812		
25	140	—	280	917	917	
26	142	142	284	976	986	
	142			996		
27	144	144	288	1160	1164	W.I. [illegible]
	144			1168		
28	152	152	304	1220	1228	W.I. lifted 2"
	152			1236		B.I. not moving
29	153	153	306	1408	1400	
	153			1392		
30	159	—	318	1434	1434	
31	171	171	342	1646	1637	
	171			1628		
32	170	—	340	1652	1652	
33	186	185	370	1840	1835	W.I. lifted 2-4"
	184			1830		B.I. [illegible]
Variable Speed Pulley on Impeller Shaft.						
34	170	170	340	1695	1680	B.I. not moving
	170			1658		W.I. lifted 5-6"
	171			1686		
35	181	181.5	363	1817	1830	
	182			1844		
36	192	191.5	383	1926	1916	W.I. lifted 10"
	191			1906		
37	211	209	418	2024	2115	
	208			2158		
	208			2160		
38	233	233.5	467	2480	2445	W.I. lifted 12-14"
	234			2410		
39	268	267	534	2704	2714	B I lifted 7-8"
	266			2724		
40	319	320	640	3048	3109	
	320			3178		
	320			3100		
41	432	432.5	865	3774	3758	
	433			3742		
42	392	—	784	3534	3534	
43	342	—	684	3252	3252	

CONTINUED

Sheet 3 of 14

DATA SHEET

NEWARK COLLEGE OF ENGINEERING

Dept

Student

Subj 5" Flat Disc in Water

Prob. No

Date

Time:

Section

Roll No.

Run No.	Meter Reading	Watts (INPUT)	RPM Reading	Average RPM
44	278	556	2858	2858
45	243	486	2486	2486
46	220	440	2290	2290
47	217	434	2276	2276
48	197	394	2010	2010
49	186	372	1812	1812

Sheet 4 of 14

DATA SHEET

NEWARK COLLEGE OF ENGINEERING

Dept Chem. Eng

Student I. Rubin

Subj 6" Flat Disc in Water

Prob. No Thesis DATA SHEET

Date

Time:

Section

Roll No.

Variable Speed Pulley on Motor Shaft.

RUN No	Meter Reading	Average	Watts (INPUT)	RPM Readings	Average RPM	REMARKS
50	189	189	378	1672	1663	B.I. tumbled along bottom
	189			1694		W.I. lifted 10" fell"
51	173	173	346	1528 1561	1550	
	173			1557		
52	165	165	330	1442	1450	B.I. not moving
	165			1456		W.I. lifted 8-9"
53	158	158	316	1280	1282	
	158			1284		
54	150	150	300	1152	1145	B.I not moving
	150			1138		W.I raised 5-6"
55	142	142	284	984	990	
	142			997		
56	140	140	280	808	807	W.I tumbled slowly
	140			806		
57	144	144	288	1026	1020	
	144			1015		
58	152	152	304	1214	1222	
				1230		
59	163	162.5	325	1454	1450	
	162			1444		
60	184	184	368	1670	1665	wattmeter needle fluctuates 3-4 watts. Probably due to belt being loose.
	184			1660		
61	199	199.5	399	1856	1846	
	200			1836		

Water Temp: Start = 67°F, End = 68°F
Water Height = 17½"
Distance of Impeller off bottom = 2⅜"

Sheet 5 of 14

NEWARK COLLEGE OF ENGINEERING

Dept Chem Eng
Student I. Rubin
Subj 6" Flat Disc in Water
Prob. No Thesis DATA SHEET Date
Time:
Section
Roll No.

Run No	Meter Reading	Average	Watts (INPUT)	RPM Readings	Average RPM	REMARKS
	VARIABLE		SPEED		PULLEY	ON IMPELLER SHAFT.
62	194	194	388	1715 1680	1710	B.I lifted ½"
	194			1737		W.I lifted 10"
63	214	—	428	1900	1900	SUCTION VORTEX OF AIR
64	216	—	432	1944	1944	BUBBLES ON BOTTOM
65	235	235	470	2080	2105	B.I lifted 1½-3"
	235			2130		W.I lifted 11½"
66	269	269	538	2396	2393	SOME AIR BUBBLES STIRRED
	269			2390		INTO LIQUID ALONG SHAFT.
67	321	320.5	641	2644 2700	2665	B.I. lifted 10", W.I. 12"
	320			2650		
68	401	401	802	3010	3000	N.I lifted 13", B.I.— 12"
	401			2993		
69	545	—	1090	3498	3498	
70	542	—	1084	3406	3406	B.I & W.I lifted 14-15"
71	541	—	1082	3360	3360	Considerable Air Bubbles.
72	614	612.5	1225	3632	3636	Agitation quite turbulent.
	611			3640		
73	352	352	704	2832	2819	
	352			2805		
74	268	—	536	2350	2350	
75	214	—	428	1974	1974	
76	183	183	366	1680	1687	
	183			1710		
				1670		

Water Temp: Start = 68°F End = 71°F
Water Height = 17½"
Distance of Impeller off bottom = 2⅜"

DATA SHEET

Sheet 6 of 14

NEWARK COLLEGE OF ENGINEERING

Dept CHEM. ENG.

Student I. RUBIN

Subj 3" DIAMETER SAW TOOTH DISC IN WATER

Prob. No THESIS - DATA SHEET

Date

Time:

Section

Roll No.

Run No.	Meter Reading	Average	Watts (Input)	RPM Readings	Average RPM	Remarks
	VARIABLE	SPEED	PULLEY	ON MOTOR SHAFT		
77	163-168 164	164	328	1807	1807	B.I not moving N.I lifted 8-9"
78	157 159	158	316	1681 1674	1678	
79	150 150	150	300	1521 1497	1510	N.I. lifted 8"
80	145 145	145	290	1354 1368	1361	
81	140 140	140	280	1217 1190	1204	N.I. lifted 6"
82	138 138	138	276	1050 1075	1062	N.I. lifted 2-3"
83	134 134	134	268	903 914	908	
84	134 136	135	270	870 941	905	N.I. not moving.
85	139	—	278	1072	1072	
86	140	—	280	1227	1227	
87	147	—	294	1372	1372	
88	150	—	300	1513	1513	
89	152 153	153	306	1565 1592	1578	

Water Temp Start = 57°F, End = 57°F

Sheet 7 of 14

NEWARK COLLEGE OF ENGINEERING

Dept Chem. Eng. Student I. Rubin

Subj 3" Diameter Saw Tooth Disc in Water Prob. No Thesis - Data Sheet Date

Time: Variable Speed Pulley on Impeller Shaft Section Roll No.

Run No.	Meter Reading	Average	Watts (Input)	RPM Readings	Average RPM	Remarks
90	163	163	326	1708	1711	B.I. jiggling
	163			1714		W.I raised 8½" max
91	173	173	346	1850	1844	
	172			1838		
	174					
92	181	181	362	2030	2035	B.I moved along bottom
	182			2040		W.I raised 9½" max
	180					
	181					
93	198	199	398	2256	2274	
	200			2292		
	199					
94	219	221	442	2554	2572	B.I lifted 2 to 3"
	221			2591		W.I lifted 12-14"
	225					
	220					
95	261	259	518	2885	2884	
	256			8884		
96	315	315	630	3344	3338	B.I lifted 9"
	315			3331		W.I lifted 12"-16"
97	[illegible]	380	760	3660	3647	AGITATION VERY GOOD
	380			3634		B.I & W.I both lifted about 12-16"
	379					
	382					
98	266	268	536	3068	3046	
	270			3024		
99	221	221	442	2550	2580	
100	231	230	460	2652	2646	
	230			2640		
101	198	198	396	2288	2288	
102	208	208	416	2368	2368	
103	180	180	360	2106	2106	
104	169	169	338	1866	1881	
	169			1906		
				1870		

Water Temp Initial = 57°F, Final = 59°F

Water Depth = 17¼"

Impeller heighth off bottom = 2¼"

Sheet 6 of 14

NEWARK COLLEGE OF ENGINEERING

Dept Chem. Eng.
Student I. Rubin
Subj 9" Saw Teeth Impeller in Water
Prob. No Thesis DATA SHEET
Date
Time:
Section
Roll No.

Run No	Meter Reading	Average	Watts (input)	RPM Readings	Average RPM	Remarks
105	195	196.5	393	1852	1830	
	198			1808		
106	186	185.5	371	1690	1681	B.I. lifted 8"
	185			1672		W.I lifted 10"
107	170	170	340	1550	1552	
	170			1554		
108	159	164	328	1390	1387	
	169			1384		
109	161	161	322	1376	1377	B.I. lifted up to 2"
	161			1378		
110	154	154	308	1264	1268	B.I tumbled along bottom
	154			1272		W.I lifted 9"
111	143	143	286	1142	1137	
	143			1132		
112	136	136	272	1006	1009	
	136			1012		
113	131	131	262	874	878	B.I. motionless
	131			882		W.I. lifted 6-7"
114	129	—	258	813	813	
115	132	—	264	932	932	
116	141	—	282	1096	1096	
117	168	—	336	1462	1462	
118	178	—	356	1578	1578	
119	196	—	392	1696	1696	

Welding Machine on Same power line as motor

Variable Speed Pulley on Motor Shaft

Water Temp Start = 53°F, Water Temp End = 55°F

Impeller located $2\frac{5}{8}$" off bottom (to bottom face of imp.)

Water Depth = 17½"

Sheet 9 of 14

NEWARK COLLEGE OF ENGINEERING

Dept Chem. Eng. Student I. Rubin

Subj 4" Saw Tooth Impeller in Water Prob. No Thesis DATA SHEET Date

Time: Section Roll No.

Run No	Motor Readings	Average	Watts (INPUT)	RPM Readings	Average RPM	REMARKS
	VARIABLE SPEED PULLEY ON IMPELLER SHAFT.					
1	475	477	954	2934	2917	VIOLENT AGITATION
	472			2900		WATER BECAME OPAQUE
	485					
12	590	—	1180	3100	3100	DITTO
12	200	205	410	1780	1761	WI lifted 12-14"
	210			1742		
12	218	218.5	437	1848	1864	
	219			1880		
12	238	240	480	2022	2013	a din vibration noise coincided with rise of meter reading. With disappearance of noise meter reading would drop off to 238. Surface of liquid became more ruffled as vibration increased *
	252			1996		
	300					
	238					
	238					
25	207	203.5	407	1720	1724	WI lifted 12" BI 8"
	200			1728		
12	[illegible]-250			1940		Probably critical speed range, Do not calculate.
12	[illegible]-223			1881		
12	[illegible]-260			2038		
12	240-270			2056		
13	330-350			2270		
13	330-370			2300		
13	369	369	738	2418	2420	
	369			2422		
13	376	—	752	2427	2427	
13	437	435	870	2700	2701	
	433			2702		
13	445	—	890	2800	2800	
13	415	—	830	2782	2782	
13	570	—	1140	2910	2910	
13	625	—	1250	3050	3050	

For Readings 1 to 11 Water Temp = 55°F
" " 12 to 19 " " = 67°F
Impeller bottom face 2 5/8" off bottom
Water Depth = 17½"

* This whole effect probably due to critical speed effect.

Sheet 10 of 14

NEWARK COLLEGE OF ENGINEERING

Dept Chem. Eng
Student I. Rubin
Subj 4" Six Bladed Turbine In Water
Prob. No Thesis DATA SHEET
Date
Time:
Section
Roll No.

Run No	Meter Reading	Average	WATTS (INPUT)	RPM Reading	Average RPM	REMARKS
VARIABLE SPEED PULLEY ON MOTOR SHAFT						
139	269 265	267	534	1720 1712	1716	
140	237 239 241 242 236 236	239	478	1594 1620	1607	W.I. lifted 12 to 14"; B.I. lifted 8 to 10"
141	208 208	208	416	1416 1426	1421	
142	185 187	186	372	1312 1322	1317	
143	170 169	169.5	339	1128 1164	1146	W.I. lifted 10" B.I lifted 6"
144	154 156	155	310	997 950 972	973	
145	147 147	147	294	864 840	852	
146	142 142	142	284	796 778	787	W.I. lifted 6" B.I. tumbled
147	153	—	306	954	954	
148	161	—	322	1080	1080	
149	178	—	356	1210	1210	

Water Temp. = 67°F
Water Depth = 17½"

Sheet 11 of 14

NEWARK COLLEGE OF ENGINEERING

Dept Chem. Eng.
Student I. Rubin
Subj 4" Six Bladed Turbine in Water
Prob. No Thesis DATA SHEET
Date
Time:
Section
Roll No.

Run No.	Meter Reading	Average Reading	Watts Input	RPM Readings	Average RPM	Remarks
	VARIABLE SPEED PULLEY ON IMPELLER SHAFT.					
150	268	267.5	535	1720	1736	W.I lifted 12-15"
	267			1752		B.I lifted 10"
151	308	310	620	1860	1860	
	312			1860		
152	376	378.5	757	2058	2082	
	381			2106		violent Agitation
153	564	560	1020	2532	2507	Water became clouded
	556			2482		BI & WI lifted to top of liquid
154	458	—	916	2250	2250	(SOME EXTRA VIBRATION)
155	465	—	930	2300	2300	
156	376	377	754	2116	2115	
	378			2114		
157	324	328	656	1982	1979	
	332			1976		
158	282	281.5	563	1796	1810	
	281			1824		

Water Temp = 67°F.
Water Depth = 17½"
Impeller Bottom Face 2½" off bottom of tank.

Wire Insulation Used for indicating degree of agitation stuck in the grooves of this impeller. Could be removed by rotating back and forth by hand.

Sheet 12 of 14

NEWARK COLLEGE OF ENGINEERING

Dept Chem. Eng.
Student I. Rubin
Subj 4" Six Bladed Turbine in 20% Sugar Solution
Prob. No Thesis DATA SHEET
Date
Time:
Section
Roll No.

Run No	Meter Reading	Average	Watts (INPUT)	RPM Readings	Average RPM	REMARKS
VARIABLE SPEED PULLEY ON MOTOR SHAFT						
159	289 287 288	288	576	1770 1728 1720	1736	Liquid Cloudy B.I lifted 10-12"
160	255 254 256	255	510	1550 1564 1520	1557	W.I lifted 13-15"
161	221 221	221	442	1470 1466	1468	W.I lifted 11-13" B.I lifted 8-10"
162	198 197	197.5	395	1360 1324	1342	Liquid Clear B.I lifted 6-8"
163	178 178	178	356	1200 1220	1210	
164	161 161	161	322	1060 1080	1070	W.I lifted 6" B.I lifted 3"
165	150 150	150	300	920 930	925	
166	143 143	143	286	774 796	785	W.I lifted 4" B.I lifted ½ to 1"
167	152 152	152	304	940 950	945	
168	166	—	332	1132	1132	
169	182 183	182.5	365	1266	1266	
170	206	—	412	1420	1420	
171	232 233 232	232.5	465	1580 1580	1580	
172	265 269	267	534	1720	1720	Solution still clear
173	282 284	283	566	1800 1784	1792	Solution somewhat cloudy.

Solution Temp: Start = 67°F End = 68°F
Impeller 2½" off bottom
Liquid Depth = $17\frac{5}{16}$"

Sheet 13 of 14

NEWARK COLLEGE OF ENGINEERING

Dept Chem. Eng.
Student I. Rubin
Subj 4" SIX BLADED TURBINE IN 20% SUGAR SOLUTION
Prob. No Thesis DATA SHEET
Date
Time:
Section
Roll No.

Run No.	Meter Readings	Average	Watts (INPUT)	RPM Readings	Average RPM	REMARKS
VARIABLE SPEED PULLEY ON IMPELLER SHAFT						
174	272 270 274	272	544	1680 1734	1707	Liquid Clear
175	305 303	304	608	1834 1800	1817	Liquid Cloudy BI lifted 15"
176	345 341 345	343	686	1940 1890	1915	Liquid Opaque Very Turbulent Surface
177	401 399	400	800	2120 2104	2112	
178	480	480	960	2294	2294	
179	545	545	1090	2372	2372	
180	425 425	425	850	2136 2122	2129	Liquid Opaque
181	364	364	728	1980	1980	Liquid Opaque
182	319 320 318	319	638	1822	1822	Agitator Stopped 5 min. Liquid Cleared. Agitator started again. Liquid became cloudy but not opaque.
183	297 300 298	298	596	1710 1760	1735	
184	280 282	281	562	1690	1690	

Solution Temp — 68°F
Impeller 2½" off bottom.
Liquid Depth = 17 5/16"

Sheet 14 of 14

NEWARK COLLEGE OF ENGINEERING

Dept Chemical Engineering Student L. Rubin
Subj 4" Six Bladed Turbine Prob. No Thesis DATA SHEET Date
Time: in 40% Sugar Solution Section Roll No.

RUN No	METER READING	AVG	WATTS INPUT	RPM READING	AVG. RPM	REMARKS
185	292	287	574	1740	1750	
	284			1760		
	285					
186	257	260	520	1630	1617	W I lifted 16", B.I-14"
	263			1604		
187	226	225	450	1480	1453	
	224			1426		
188	192	192.5	385	1280	1298	B.I lifted 10-12"
	193			1316		W I lifted 12-14"
189	173	173.5	347	1160	1140	
	174			1120		
190	158	157.5	315	1010	1020	B. I tumbles along bottom
	157			1030		W. I. lifted 8-9"
191	147	147	294	860	852	
	147			844		
192	144	143.5	287	760	770	
	143			780		

VARIABLE SPEED PULLEY ON MOTOR SHAFT ABOVE
" " " " IMPELLER " BELOW

RUN No	METER READING	AVG	WATTS INPUT	RPM READING	AVG. RPM	REMARKS
193	304	303.5	607	1664	1678	
	303			1692		
194	350	351	702	1790	1800	SOLUTION BECAME CLOUDY
	352			1810		
195	417	418	836	2000	2000	SOLUTION BECAME OPAQUE
	419			2000		
196	518	—	1036	2188	2188	
197	590	—	1180	2294	2294	
198	485	—	970	2116	2116	
199	388	—	776	1940	1940	

LIQUID DEPTH = 17 3/4"
LIQUID TEMPERATURE = 67°F

CALCULATION SHEET

Sheet 1 of 8

NEWARK COLLEGE OF ENGINEERING

Dept Chem. Eng.
Student I. Rubin
Subj 4" DIAMETER FLAT DISC IN WATER
Prob. No Thesis CALCULATION SHEET
Date
Time:
Section
Roll No.

Run No.	Watt to Motor Watts	Motor Output Watts	Losses Watts	Impeller Power Watts	Impeller Power HP	N R.P.M.	Re $\times 10^{-3}$	N^3 $\times 10^{-6}$	Po	Run No
1.	260	84	75	9	.0121	778	124	508	.354	1
2	260	84	76.5	7.5	.0100	864	135	641	.233	2
3	264	87	79	8	.0107	958	149	880	.182	3
4	268	92	80	12	.0161	1008	157	1020	.236	4
5	276	99	83	16	.0214	1138	177	1460	.219	5
6	276	99	85	14	.0187	1194	186	1700	.114	6
7	280	102	87	15	.0201	1302	203	2210	.136	7
8	286	107	89	18	.0241	1380	215	2620	.137	8
9	287	108	92	16	.0214	1475	230	3210	.100	9
10	295	115	98	17	.0228	1585	247	3990	.085	10
11	312	122	104	18	.0241	1659	258	4530	.079	11
12	315	132	118	14	.0187	1804	281	5870	.048	12
13	314	133	120	13	.0174	1820	284	6000	.043	13
	VARIABLE	SPEED	PULLEY	ON MOTOR	SHAFT	ABOVE				
	"	"	"	" IMPELLER	"	BELOW				
1	315	134	123	11	.0147	1631	254	4350	.050	14
2	325	142	129	13	.0174	1772	276	5580	.046	15
3	345	160	136	24	.0321	1926	300	7150	.067	16
4	379	186	149	37	.0496	2191	340	10,400	.071	17
5	411	220	168	52	.0696	2463	384	15,000	.070	18
6	449	270	200	70	.0937	2857	445	23,300	.060	19
7	582	373	265	108	.145	3430	535	40,300	.054	20
8	[illegible]	360	251	109	.146	3370	525	38,200	.054	21
9	[illegible]	426	315	111	.149	3816	595	55,500	.040	22
10	[illegible]	419	308	111	.149	3766	587	53,500	.042	23

$Re = \frac{L^2 N \rho}{\mu}$; @ 59°F (15°C) $\rho_{H_2O} = 62.2$ lbs/ft³ ; μ_{H_2O} = 1.1 centipoise (Perry p. 372)

$$Re = \frac{\left(\frac{4}{12}\right)^2 \left(\frac{N}{60}\right) [illegible] (62.2)\ \text{lbs/ft}^3}{1.1 \times .000672\ \frac{\text{lbs}}{\text{ft}\cdot\text{sec}}} = 156N$$

$$P_o = \frac{HP \ [illegible] \left(550 \frac{\text{ft-lb/sec}}{HP}\right)}{\left(\frac{N}{60} \frac{\text{rev}}{\text{sec}}\right)^3 (L\ \text{ft})^5 \left(\rho \frac{\text{lbs}}{\text{ft}^3}\right)} = \frac{HP(32.2)(550)(60)^3}{N^3 (.333)^5 (62.2)}$$

$$= \frac{HP(32.2)(550)(216{,}000)}{N^3 (.00411)(62.2)} = 1.495 \times 10^{10} \left(\frac{HP}{N^3}\right)$$

CALCULATION SHEET

Sheet 2 of 8

NEWARK COLLEGE OF ENGINEERING

Dept Chem. Eng	**Student** I. Rubin		
Subj 5" FLAT DISC IN WATER	**Prob. No** Thesis - CALCULATION SHEET	**Date**	
Time:	**Section**	**Roll No.**	

	INPUT TO MOTOR WATTS	MOTOR OUTPUT WATTS	LOSSES WATTS	IMPELLER WATTS	POWER HP	N R.P.M.	Re	$N^3 \times 10^{-6}$	P_o	Run No
	Variable Speed Pulley on Motor Shaft.									
1	200	102	75.5	26.5	.0355	808	197,000	527	.330	24
2	280	102	78	24	.0322	917	223,500	770	.205	25
3	284	106	80	26	.0348	986	240,400	959	.178	26
4	290	110	84	26	.0348	1164	283,800	1,580	.108	27
5	306	124	85.5	38.5	.0516	1228	299,400	1,850	.137	28
6	306	125	90	35	.0469	1400	341,000	2,740	.0838	29
7	310	137	91	46	.0616	1434	349,500	2950	.1024	30
8	342	157	102.5	54.5	.0730	1637	399,000	4,370	.0818	31
9	340	156	103	53	.0710	1652	403,000	4,510	.0771	32
10	370	183	122	61	.0817	1835	447,000	6,180	.0648	33
	Variable Speed Pulley on Impeller Shaft.									
1	340	156	125	31	.0415	1680	409,000	4,740	.0430	34
2	365	176	131	45	.0603	1830	446,000	6,120	.0482	35
3	392	195	135	60	.0805	1916	467,500	7,020	.0561	36
4	440	227	146	81	.1085	2145	515,000	9,450	.0566	37
5	447	270	166	104	.1392	2445	596,000	10,460	.0655	38
6	534	330	187	142	.1917	2714	662,000	20,000	.0470	39
7	640	425	225	200	.268	3109	759,000	30,000	.0438	40
8	845	622	306	316	.423	3758	916,000	53,000	.0391	41
9	735	557	275	282	.378	3534	862,000	44,000	.0421	42
10	655	466	240	226	.303	3252	793,000	34,300	.0432	43
11	536	350	200	150	.201	2858	696,000	23,300	.0423	44
12	406	287	169	118	.158	2486	606,000	15,350	.0506	45
13	[illegible]	245	156	89	.1191	2290	559,000	12,000	.0486	46
14	[illegible]	200	155	85	.1139	2276	555,000	11,780	.0474	47
15	[illegible]	205	140	65	.0870	2010	490,000	8,120	.0525	48
16	302	185	130	55	.0736	1812	441,600	5,940	.0608	49

$R_e = \frac{L^2 N \rho}{\mu}$: @ 59°F (15°C) $\rho_{H_2O} = 62.2\ \text{lbs}/\text{ft}^3$, $\mu_{H_2O} = 1.1$ centipoise (Perry p. 373.)

$$R_e = \frac{\left(\frac{5}{12}\ \text{ft.}\right)^2 \left(\frac{N}{60}\right) \frac{\text{rev}}{\text{sec}}\ (62.2)\ \text{lbs}/\text{ft}^3}{1.1 \times .000672\ \frac{\text{lbs}}{\text{ft sec}}} = 243.8\,N$$

$$P_o = \frac{HP\left(550\ \frac{\text{ft.-lb/sec.}}{HP}\right)\left(g_c\ \text{ft}/\text{sec}^2\right)}{\left(\frac{N}{60}\ \frac{\text{rev}}{\text{sec}}\right)^3 (L\ \text{ft})^5 \left(\rho\ \frac{\text{lbs}}{\text{ft}^3}\right)} = \frac{HP(32.2)(550)(60)^3}{N^3(.417)^5(62.2)}$$

$$= \frac{HP(32.2)(550)(216,000)}{N^3(.0126)(62.2)} = .49 \times 10^{10}\left(\frac{HP}{N^3}\right)$$

CALCULATION SHEET

Sheet 3 of 8

NEWARK COLLEGE OF ENGINEERING

Dept
Student I. Rubin
Subj 6" Flat Disc In Water
Prob. No Thesis CALCULATION SHEET
Date
Time:
Section
Roll No.

	WATTS TO MOTOR WATTS	MOTOR OUTPUT WATTS	LOSSES WATTS	IMPELLER WATTS	IMPELLER HP	N RPM	Re×10^{-3}	N^3 ×10^{-6}	P_o	Run No
Variable Speed Pulley on Motor Shaft.										
1	378	191	106	85	.114	1683	651	4790	.0468	50
2	376	162	97	65	.0870	1550	599	3710	.0462	51
3	330	147	92	55	.0736	1450	560	3050	.0478	52
4	316	135	87	48	.0643	1282	495	2110	.0600	53
5	300	120	84	36	.0482	1145	442	1500	.0632	54
6	289	106	80	26	.0348	990	382	965	.0710	55
7	280	102	75	27	.0362	807	312	525	.1365	56
8	288	110	81	29	.0388	1020	394	1060	.0702	57
9	304	124	86	38	.0509	1222	472	1830	.0548	58
10	[illegible]	143	92	51	.0683	1450	560	3050	.0441	59
11	360	181	105	76	.102	1665	644	4600	.0437	60
12	399	209	123	86	.115	1846	713	6280	.0360	61
Variable Speed Pulley on Impeller Shaft										
1	388	199	126	73	.099	1710	660	5000	.0390	62
2	425	235	134	101	.135	1900	734	6810	.0390	63
3	432	237	137	100	.134	1944	751	7350	.0360	64
4	470	272	145	127	.170	2105	813	9350	.0358	65
5	538	334	163	171	.229	2393	925	13700	.0330	66
6	641	426	183	243	.326	2665	1060	19000	.0338	67
7	802	572	214	358	.480	3000	1160	27000	.0350	68
8	1070	765	270	495	.664	3498	1350	42800	.0306	69
9	1054	763	258	505	.676	3406	1315	39500	.0338	70
10	1032	762	252	510	.684	3360	1300	38000	.0354	71
11	1225	814 ㊉	288	526	.705	3636	1400	48000	.0290	72
12	704	484	196	288	.386	2819	1090	22400	.0340	73
13	536	332	160	172	.230	2350	908	13000	.0349	74
14	428	235	138	97	.130	1974	763	7650	.0335	75
15	366	180	125	55	.0736	1687	651	4800	.0302	76

$Re = \frac{L^2 N \rho}{\mu}$; @ 70°F (21.1°C) $\rho = 62.2$, $\mu = 1.0$ centipoise

$$= \frac{\left(\frac{6}{12}\right)^2 \left(\frac{N}{60}\right)(62.2)}{(1.0)(.000672)} = \frac{62.2\,N}{4 \times 60 \times 6.72 \times 10^{-4}} = 386N$$

$$P_o = \frac{(HP)(32.2)(550)}{\left(\frac{N}{60}\right)^3 \left(\frac{6}{12}\right)^5 (62.2)} = \frac{HP}{N^3}\left(\frac{32.2 \times 550 \times 2.16 \times 10^5}{\frac{1}{32} \times 62.2}\right) = .197 \times 10^{10} \frac{HP}{N^3}$$

㊉ Estimated by extrapolation of meter calibration curve.

CALCULATION SHEET

Sheet 4 of 8

NEWARK COLLEGE OF ENGINEERING

Dept CHEM. ENG.   Student L. RUBIN

Subj 3" DIAMETER SAW TOOTH DISC IN WATER   Prob. No THESIS - CALCULATION SHEET   Date

Time: Section   Roll No.

	INPUT TO MOTOR WATTS	MOTOR OUTPUT WATTS	LOSSES WATTS	IMPELLER WATTS	POWER HP	N RPM	Re × 10^{-3}	N^3 × 10^{-6}	P_o	Run No
	VARIABLE SPEED PULLEY ON MOTOR SHAFT									
1	328	145	119	26	.0348	1807	149	5890	.372	77
2	316	134	106	28	.0376	1678	138	4700	.370	78
3	300	120	94	26	.0348	1510	124	3430	.639	79
4	290	111	89	22	.0295	1361	112	2530	.735	80
5	280	102	85	17	.0228	1204	99.5	1750	.820	81
6	276	99	77	22	.0295	1062	87.6	1200	1.55	82
7	268	91	73	18	.0241	908	74.8	750	2.02	83
	270	93	73	20	.0268	905	74.6	740	2.28	84
	278	100	82	18	.0241	1072	88.5	1230	1.24	85
	280	101	86	15	.0201	1227	101	1890	.688	86
11	294	114	89	25	.0335	1372	113	2590	.815	87
12/13	300 306	120 125	94 98	26 27	.0348 .0366	1513 1578	125 130	3400 3910	.645 .590	88
	VARIABLE SPEED PULLEY ON IMPELLER SHAFT									
1	326	143	126	17	.0228	1711	141	5000	.288	89
2	346	162	132	30	.0402	1844	152	6250	.405	90
3	362	175	141	34	.0456	2035	168	8400	.342	91
4	392	208	155	53	.0710	2274	188	11700	.381	92
5	442	246	176	70	.0938	2572	212	17000	.348	93
6	518	315	203	112	.150	2884	238	24000	.394	94
7	630	417	249	168	.225	3338	279	37000	.384	95
8	760	535	290	245	.328	3647	301	48500	.426	96
9	536	331	218	113	.1515	3046	251	28300	.338	97
10	442	246	177	69	.0925	2580	213	17100	.341	98
11	460	263	182	81	.1085	2646	218	18500	.370	99
12	396	206	156	50	.0670	2288	189	12000	.352	100
13	416	224	161	63	.0845	2368	195	13250	.401	101
14	360	174	145	29	.0388	2106	174	9350	.264	102
15	338	155	134	21	.0281	1881	155	6650	.266	103

$Re = \frac{L^2 N \rho}{\mu}$; @ 57°F (13.9°C) $\rho_{H_2O} = 62.2$ $\mu_{H_2O} = 1.17$ (Perry p 374

$$Re = \frac{\left(\frac{3}{12}\right)^2 \frac{N}{60}(62.2)}{1.17 \times .000672} = 82.5N$$

$$P_o = \frac{(HP)(550)(g_c)}{\left(\frac{N}{60}\right)^3 (L)^5 (\rho)} = \frac{HP(550)(32.2)(216,000)}{N^3\left(\frac{1}{1024}\right)(62.2)}$$

$$= 6.3 \times 10^{10} \left(\frac{HP}{N^3}\right)$$

CALCULATION SHEET

Sheet 5 of 8

NEWARK COLLEGE OF ENGINEERING

Dept Chem. Eng. Student I. Rubin

Subj 4" Saw Tooth Impeller in Water Prob. No Thesis CALCULATION SHEET Date

Time: Section Roll No.

	WATTS INPUT	WATTS OUTPUT	WATTS LOSSES	IMPELLER WATTS	IMPELLER HP	N RPM	$Re\times10^{-3}$	$N^3 \times10^{-6}$	P_o	RUN NO
VARIABLE SPEED PULLEY ON Motor Shaft.										
1	393	203	122	81	.109	1830	262	6130	.265	105
2	371	184	106	78	.105	1681	240	4750	.329	106
3	340	155	97	58	.0778	1552	222	3750	.309	107
4	326	145	89	56	.0750	1387	198	2650	.422	108
5	322	140	89	51	.0684	1377	197	2600	.392	109
6	318	128	86	42	.0564	1268	181	2040	.412	110
7	286	107	86	21	.0282	1137	162	1460	.288	111
8	272	94	80	14	.0187	1009	144	1020	.273	112
9	264	87	77	10	.0134	878	125	680	.294	113
10	258	82	75	7	.0094	813	106	540	.294	114
11	264	88	78	10	.0134	932	133	810	.250	115
12	282	104	82	22	.0295	1096	157	1310	.335	116
13	336	152	92	60	.0805	1462	209	3120	.384	117
14	356	170	78	72	.0965	1578	225	3900	.369	118
15	392	201	108	93	.125	1696	242	4860	.382	119
VARIABLE SPEED PULLEY ON IMPELLER SHAFT										
	954	680	205	475	.636	2917	416	29600	.386	120
	1180	800	224	576	.784	3100	444	29700	.393	121
	410	219	128	91	.122	1761	252	5420	.336	122
	437	243	133	110	.148	1664	266	6950	.342	123
	480	281	140	141	.189	2013	288	8150	.346	124
	407	217	126	91	.122	1724	246	5100	.356	125
(Readings 7-12 inclusive not used because of shaft vibration [illegible] Wattmeter readings)										
[illegible]	738	515	164	351	.262	2420	414	14100	.287	126
[illegible]	732	528	165	363	.271	2427	415	14200	.295	127
[illegible]	820	626	186	440	.590	2701	462	19700	.446	128
[illegible]	870	641	195	446	.585	2600	479	22000	.396	129
[illegible]	820	595	194	401	.538	2782	475	21500	.373	130
[illegible]	1140	787	205	582	.780	2910	498	24600	.472	131
[illegible]	1250	820	214	606	.814	3050	521	28400	.424	132

WATER TEMP = 55°F

WATER TEMP = 67°F

$R_e = \frac{L^2 N \rho}{\mu}$; @ 55°F $R_e = \frac{(\frac{4}{12})^2(\frac{N}{60})(62.3)}{1.2\times.000672} = 143N$

@ 67°F $R_e = \frac{(\frac{4}{12})^2(\frac{N}{60})(62.2)}{1.0\times.000672} = 171N$

$P_o = \frac{HP\, g_c\, 550}{(\frac{N}{60})^3(\frac{4}{12})^5(62.25)} = 1.49\times10^{10}\left(\frac{HP}{N^3}\right)$

At	55°F (12.8°C)	67°F (19.4°C)	
ρ =	62.3	62.2	lbs/ft^3
μ =	1.2	1.0	cp.

CALCULATION SHEET

Sheet 6 of 8

NEWARK COLLEGE OF ENGINEERING

Dept Chem. Eng.

Student I. Rubin

Subj 4" SIX BLADED TURBINE IN WATER

Prob. No Thesis CALCULATION SHEET

Date

Time:

Section

Roll No.

	WATTS INPUT	WATTS OUTPUT	WATTS LOSSES	IMPELLER WATTS	IMPELLER HP	N RPM	$Re \times 10^{-3}$	$N^3 \times 10^{-6}$	Po	Run No
Variable Speed Pulley on Motor Shaft.										
1	534	331	109	221	.296	1716	293	5030	.877	139
2	478	280	100	180	.241	1607	274	4120	.872	140
3	416	225	90	135	.181	1421	243	2870	.939	141
4	372	185	88	97	.130	1317	225	2270	.854	142
5	339	155	83	72	.0965	1146	196	1500	.957	143
6	310	130	80	50	.0670	973	166	.920	.958	144
7	294	115	76	39	.0523	852	146	620	1.26	145
8	284	105	75	30	.0402	787	135	490	1.22	146
9	306	127	79	48	.0643	954	163	860	1.11	147
10	322	142	82	60	.0804	1080	185	1260	.950	148
11	336	172	85	87	.117	1210	207	1760	.990	149
Variable Speed Pulley on Impeller Shaft.										
1	535	332	126	206	.277	1736	296	5200	.795	150
2	620	409	132	277	.371	1860	318	6410	.860	151
3	757	538	143	395	.530	2082	356	9000	.876	152
4	1020	734	171	563	.755	2507	440	15800	.911	153
5	916	662	154	508	.681	2250	384	11400	.891	154
6	930	673	156	507	.680	2300	294	12100	.836	155
7	754	531	147	384	.515	2115	362	9400	.815	156
8	664	441	138	303	.406	1979	336	7700	.785	157
9	543	355	130	225	.302	1810	310	5900	.763	158

$Re = \frac{L^2 N \rho}{\mu}$; @67°F (19.4°C) $\rho = 62.2\ ^{lbs}/_{ft^3}$, $\mu = 1.0$ cp

$$Re = \frac{\left(\frac{4}{12}\right)^2 \left(\frac{N}{60}\right)(62.2)}{(1.0)(.000672)} = 171N$$

$$P_o = \frac{HP\, g_c\, 550}{\left(\frac{N}{60}\right)^3 \left(\frac{4}{12}\right)^5 (62.2)} = 1.49 \times 10^{10} \left(\frac{HP}{N^3}\right)$$

CALCULATION SHEET

Sheet 7 of 8

NEWARK COLLEGE OF ENGINEERING

Dept Chem. Eng.
Student I. Rubin
Subj 4" Six Blade Turbine in 20% Sugar Solution.
Prob. No Thesis
Date
Time:
Section
Roll No.

	WATTS INPUT	WATTS OUTPUT	WATTS LOSSES	IMPELLER WATTS	IMPELLER HP	N RPM	$Re \times 10^{-3}$	$N^3 \times 10^{-6}$	Po.	Run No
VARIABLE SPEED PULLEY ON MOTOR SHAFT.										
1	576	368	111	257	.344	1736	165	5210	.904	159
2	510	308	97	211	.283	1557	148	3780	1.03	160
3	442	247	92	155	.208	1468	139	3150	.905	161
4	395	206	89	117	.157	1342	127	2430	.885	162
5	356	171	85	86	.115	1210	115	1770	.890	163
6	322	140	82	58	.0776	1070	102	1220	.871	164
7	300	120	78	42	.0563	925	89	790	.976	165
8	286	107	75	32	.0429	785	75	480	1.22	166
9	304	124	77	45	.0603	945	90	840	.984	167
10	332	148	83	65	.0871	1132	108	1450	.824	168
1	345	179	86	93	.125	1266	120	2030	.845	169
1	412	220	90	130	.174	1420	135	2860	.834	170
1	445	268	98	170	.228	1580	150	3920	.800	171
1	534	330	110	220	.295	1720	163	5090	.795	172
1	566	358	117	241	.323	1792	170	5780	.765	173
VARIABLE SPEED PULLEY ON IMPELLER SHAFT										
1	544	339	126	213	.286	1707	162	4980	.786	174
2	608	397	130	267	.358	1817	173	5990	.877	175
3	686	468	135	333	.446	1915	182	7000	.874	176
4	800	571	145	426	.570	2112	201	9400	.831	177
5	760	694	156	538	.720	2294	218	12000	.822	178
6	1090	772	161	611	.820	2372	225	13400	.838	179
7	850	615	146	469	.628	2129	203	9600	.896	180
8	728	506	138	368	.494	1980	188	7750	.874	181
9	638	425	131	294	.394	1822	173	6050	.893	182
10	576	386	127	259	.347	1735	165	5200	.916	183
1	562	355	125	230	.308	1690	161	4800	.878	184

$Re = \frac{L^2 n \rho}{\mu}$; @ 68°F (20°C) for 20% sucrose solution

$\rho = 1.08 \times 62.4 = 67.4$
$\mu = 1.96$
} (Rubber Handbook p 1729, p 1842)

$$Re = \frac{\left(\frac{4}{12}\right)^2 \left(\frac{N}{60}\right)(67.4)}{1.96 \times .000672} = 95N$$

$$Po = \frac{(1.0)(32.2)(550)}{\left(\frac{N}{60}\right)^3 \left(\frac{4}{12}\right)^5 (67.4)} = \left(\frac{HP}{N^3}\right)\left(\frac{32.2 \times 550 \times 2.16 \times 10^5}{\frac{1}{241} \times 67.4}\right) = 1.37 \times 10^{10}\left(\frac{HP}{N^3}\right)$$

CALCULATION SHEET

Sheet 8 of 8

NEWARK COLLEGE OF ENGINEERING

Dept Chem. Eng.

Student I. Rubin

Subj 4"- Six Bladed Turbine in 40% Sugar Solution

Prob. No Thesis CALCULATION SHEET.

Date

Time:

Section

Roll No.

	WATTS INPUT	WATTS OUTPUT	WATTS LOSSES	IMPELLER WATTS	IMPELLER HP	RPM	$Re \times 10^{-3}$	$N^3 \times 10^{-6}$	P_0	Run No
VARIABLE SPEED PULLEY ON MOTOR SHAFT										
1	544	372	113	259	.348	1750	56.8	5350	.825	185
2	520	319	101	218	.292	1617	52.5	4210	.880	186
3	450	256	92	164	.220	1453	47.3	3080	.907	187
4	285	197	87	110	.148	1298	42.2	2180	.862	188
5	347	163	84	79	.106	1140	37.0	1480	.910	189
6	315	135	81	54	.072	1020	33.2	1060	.862	190
7	294	116	77	39	.052	852	27.7	620	1.06	191
8	287	110	75	35	.047	770	25.0	459	1.30	192
VARIABLE SPEED PULLEY ON IMPELLER SHAFT										
	617	397	124	273	.366	1678	54.4	4700	.99	193
	792	485	130	355	.474	1800	58.5	5820	1.03	194
	836	603	139	464	.621	2000	65.0	8000	.986	195
	1036	743	149	594	.795	2188	71.1	10500	.961	196
	1180	805	156	649	.870	2294	74.6	12000	.920	197
	970	701	145	556	.745	2116	68.7	9400	1.00	198
	776	551	136	415	.556	1940	63.0	7300	.968	199

$Re = \frac{L^2 n \rho}{\mu}$ @ 68°F for 40% sucrose solution

$\left.\begin{aligned} \rho &= 1.176 \times 62.4 = 73.3 \text{ lbs/ft}^3 \\ \mu &= 6.2 \text{ centipoises} \end{aligned}\right\}$ FROM RUBBER HANDBOOK p-1729 p-1842

$$Re = \frac{\left(\frac{4}{12}\right)^2 \frac{N}{60}(73.3)}{6.2 \times .000672} = 32.5N$$

$$P_0 = \frac{HP\, g_c\, 550}{L^5 n^3 \rho} = \frac{(HP)(32.2)(550)}{\left(\frac{1}{243}\right)\left(\frac{N}{60}\right)^3(73.3)} = 1.27 \times 10^{10}\left(\frac{HP}{N^3}\right)$$

Sheet 1 of 1

NEWARK COLLEGE OF ENGINEERING

Dept Chem. Eng.
Student I. Rubin
Subj Calculation For and Report on making 20% sugar solution.
Prob. No Thesis
Date
Time:
Section
Roll No.

1. $\frac{H}{D} = 1.0$ $D = 17.5''$, $H = 17.5''$

2. Diameter $= \frac{17.5}{12} = 1.459\ ft$
Area $= 1.459^2 \times \pi/4 = 1.67\ ft^2$
Volume $= 1.67 \times 1.459 = 2.44\ ft^3$

3. 20% SUCROSE SOLUTION @20°C (68°F) [From Rubber Handbook p.1729]
Sp. g = 1.08
$\rho = 1.08 \times 62.4 = 67.4\ lbs/ft^3$

4. Weights of Materials
Solution - $2.44 \times 67.4 = 164$ lbs
Sugar $20\% \times 164 = 32.9$ lbs
Water $80\% \times 164 = 131.1$ lbs

5. Depth of Water to be added to tank:
$$\frac{131.1\ lbs}{62.2\ lbs/ft^3 \times 1.67\ ft^2} = 1.26\ ft = 15\tfrac{1}{8}$$

6. Procedure
a) Mixed Hot and cold water & added to tank to 14½" depth
b) Resultant temperature 69°F
c) Time 2:53 Started addition of 3 ten lbs bags of sugar and 1.6 lbs weighed out separately.
d) Time 3:01 Sugar addition completed. About 2" layer on bottom
e) Started agitator at 3:01 and ran 60 seconds @ 1720 RPM.
f) Permitted entrapped air to rise out of solution for 2 min
g) Clear solution obtained (All Sugar Dissolved)
h) Total elapsed time 9 min.

Domino Brand Sugar Used.

Sheet.................of..................

SAMPLE CALCULATION

NEWARK COLLEGE OF ENGINEERING

Dept.................................... Student....................................

Subj.................................... Prob. No.................... Date....................

Time:.................................... Section.................... Roll No....................

IMPELLER - 4" Saw Tooth Disc
FLUID - Water
TEMPERATURE - 55°F
Run No. - 1

Watts Input to Motor ———————— 393
Watts Output from Motor
From Fig XII, p 43 ———————— 203
Watts Loses in Belt, Pulley and Bearings
From Fig XIII, p 45 ———————— 122

Watts absorbed by impeller = 203 - 122 = 81
Impeller Speed = 1830 RPM

Reynolds Number, $Re = \frac{L^2 N \rho}{\mu}$

$L = \frac{4}{12}$ ft ; $L^2 = \frac{1}{9}$ ft^2, $N = \frac{1830}{60}$ rev. per sec.
$\rho = 62.3$ lbs/ft^3, $\mu = 1.2 \times .000672$ lbs/ft-sec

$$Re = \frac{\left(\frac{1}{9}\right) \text{ft}^2 \left(\frac{1830}{60}\right) \frac{\text{rev}}{\text{sec}} (62.3) \frac{\text{lbs}}{\text{ft}^3}}{1.2 \times .000672 \text{ lbs/ft-sec}} = 262,000$$

Power Number, $P_o = \frac{HP \times 550 \times g_c}{N^3 L^5 \rho}$

$HP = .109$, $N = \frac{1830}{60}$, $N^3 = \frac{6.13 \times 10^9}{2.16 \times 10^5}$

$L^5 = \left(\frac{1}{3}\right)^5 = 0.0041$, $\rho = 62.3$

$$P_o = \frac{.109 \times 550 \times 32.2}{\frac{6.13 \times 10^9}{2.16 \times 10^5} \times .00411 \times 62.3} = .265$$

X REFERENCES

1 Chemical Engineers Handbook, J. H. Perry (editor), 2nd Edition, New York: McGraw Hill, 1941, Section 14.

2 Chemical Engineers Handbook, J. H. Perry (editor), third Edition, New York: McGraw Hill, 1950, Section 17.

3 National Electrical Code, Underwriters Laboratories, 1953, p. 159.

4 W. L. Badger and W. L. McCabe, Elements of Chemical Engineering, New York: McGraw Hill, 1936, Chap. XIV.

5 E. S. Bissel, Industrial and Engineering Chemistry, Vol. 30, May 1938, p. 493.

6 E. S. Bissel, "Basic Problems in Conducting A Research Program", Industrial and Engineering Chemistry, Vol. 36, June 1944, p. 497.

7 E. S. Bissel, S. A. Miller, and H. J. Everett, Industrial and Engineering Chemistry, Vol. 37, May 1945, p. 426.

8 E. S. Bissel, H. C. Hesse, H. T. Everett, and J. H. Rushton, Chemical Engineering Progress, Vol. 43, Dec. 1947, p. 649.

9 G. G. Brown, et al, Unit Operations, New York: John Wiley & Sons, Inc., 1950.

10 Chaddock, Chemical Engineering, Vol. 53, Nov. 1946, p. 151.

11 C. M. Cooper, G. A. Fernstrom, and A. A. Miller, "Gas Liquid Contactors", Industrial and Engineering Chemistry, Vol. 36, June 1944, p. 504.

12 D. L. Dawes, Electrical Engineering, Vol. II, New York: McGraw Hill, 1937, p. 330.

13 Gunness and Baker, *Industrial and Engineering Chemistry*, Vol. 30, May 1938, p. 497.

14 A. W. Hixson and S. J. Baum, "Agitation", *Industrial and Engineering Chemistry*, Vol. 33, April 1941, p. 479.

15 A. W. Hixson and S. J. Baum, *Industrial and Engineering Chemistry*, Vol. 33, Nov. 1941, p. 1433.

16 A. W. Hixson and S. J. Baum, "Performance of Propellers in Liquid Solid Systems", *Industrial and Engineering Chemistry*, Vol. 34, Jan. 1942, p. 120.

17 A. W. Hixson and S. J. Baum, "Power Requirements of Turbine Agitators", *Industrial and Engineering Chemistry*, Vol. 34, Feb. 1942, p. 194.

18 T. Hooker, "Prediction of Power Consumption for Geometrically Dissimilar Agitators", *Chemical Engineering Progress*, Vol. 44, Nov. 1948, p. 833.

19 E. J. Lyons, "Practical Mixer Technology", *Chemical Engineering Progress*, Vol. 44, May 1948, p. 341.

20 D. E. Mack, and E. A. Kroll, "Effect of Baffles on Agitator Power Consumption", *Chemical Engineering Progress*, Vol. 44, March 1948, p. 189.

21 MacLean and Lyons, *Industrial and Engineering Chemistry*, Vol. 30, May 1938, p. 489.

22 W. H. McAdams, *Heat Transmission*, New York: McGraw Hill, 1942, Chap. IV.

23 Miller and Mann, *Transactions of the American Institute of Chemical Engineers*, Vol. 40, Dec. 1949, p. 709.

24 O'Connell and Mack, Chemical Engineering Progress, Vol. 46, July 1950, p. 358

25 R. B. Olney and G. J. Carlson, "Power Absorption in Mixers", Chemical Engineering Progress, Vol. 43, Sept. 1947, p. 473.

26 C. S. Quillen, "Mixing -- Liquids, Pastes, Plastics, Solids, Continuous", Chemical Engineering, Vol. 61, June 1954, p. 178.

27 Rushton, et al, Transactions of the American Institute of Chemical Engineers, Vol. 42, June 1946, p. 441, "Displacement Capacities of Mixing Impellers".

28 J. H. Ruston, E. W. Costich, and H. J. Everett, "Power Characteristics of Mixing Impellers", Chemical Engineering Progress, Vol. 46, August 1950, p. 395, Part I; Vol. 46, August 1950, p. 467, Part II.

29 L. B. Ryder, "Power Characteristics in Mixing -- Two-Bladed Turbines", M. S. Thesis, Newark College of Engineering, Newark, N.J. 1952.

30 H. E. Serner, Chemical Engineering, Vol. 56, March 1949, p. 292.

31 C. E. Stoops and C. L. Lovell, "Power Consumption of Propeller Type Agitators", Industrial and Engineering Chemistry, Vol. 35, August 1943, p. 845.

32 A. McL, White, S. D. Summerford, E. O. Bryant, and B. E. Lukens, Industrial and Engineering Chemistry, Vol. 24, 1932, p. 1160.

33 A. McL. White and S. D. Summerford, Industrial and Engineering Chemistry, Vol. 25, 1933, p. 1025.

34 A. McL. White and S. D. Summerford, Industrial and Engineering Chemistry, Vol. 26, 1934, p. 82.

35 A. McL. White, E. Brenner, G. A. Phillips, and M. S. Morrison, Transactions of the American Institute of Chemical Engineers, Vol. 30, 1934, p. 570.

36 A. McL. White and E. Brenner, Studies in Agitation V, "The Correlation of Power Data", Transactions of the American Institute of Chemical Engineers, Vol. 30, 1934, p. 585.

37 A. McL. White and S. D. Summerford, Chemical and Metallurgical Engineering, Vol. 43, 1936, p. 370.